24. STANDARD CUT WASHERS SHALL BE USED UNDER ALL BOLT HEADS AND NUTS AGAINST WOOD. USE HEAVY PLATE OR MALLEABLE IRON WASHERS FOR ALL BOLTS DESIGNED TO ACT IN TENSION, SUCH AS LEDGERS AND HOLD DOWN ANCHORS.

25. LAG BOLTS SHALL BE PRE-DRILLED TO A DIAMETER OF 60 PERCENT OF THE SHANK DIAMETER. THE BOLT SHALL BE TURNED BY A WRENCH AND NOT HAMMERED.

26. CUTS AND HOLES IN PRESSURE TREATED LUMBER SHALL BE TREATED PER AWPA M 84.

LAG SCREW LEAD HOLES AND INSERTION

1. PRE-BORED HOLES FOR LAG SCREWS SHOULD HAVE THE SAME DIAMETER AS THE SHANK FOR THE LENGTH OF THE SHANK AND FROM 60 PERCENT TO 75 PERCENT OF THE SHANK DIAMETER FOR THE THREADED PORTION. THE HIGHER PERCENTAGE APPLIES TO LAG SCREWS OF LARGER DIAMETERS. EXTRA LONG LAG SCREWS MAY REQUIRE SLIGHTLY LARGER LEAD HOLES TO PREVENT SPLITTING AND TO FACILITATE TURNING.

2. LAG SCREWS SHOULD BE INSERTED BY TURNING WITH A WRENCH. DRIVING WITH A HAMMER TEARS THE WOOD FIBERS AND INJURES THE SCREW THREAD SERIOUSLY REDUCING THE LOAD CARRYING CAPACITY OF THE SCREW. SOAP OR OTHER LUBRICANTS MAY BE USED TO FACILITATE INSERTION OF LAG SCREWS.

MACHINE APPLIED NAILING

1. THE USE OF MACHINE NAILING IS SUBJECT TO A SATISFACTORY JOB SITE DEMONSTRATION FOR EACH PROJECT AND THE APPROVAL OF THE PROJECT ENGINEER. THE APPROVAL IS SUBJECT TO CONTINUED SATISFACTORY PERFORMANCE.

2. NAIL HEADS SHALL NOT PENETRATE THE OUTER PLY MORE THAN WOULD BE NORMAL FOR A HAND HAMMER.

3. EDGE DISTANCES SHALL BE MAINTAINED. SHINERS SHALL BE REPLACED. IF NAIL HEADS PENETRATE THE OUTER PLY MORE THAN WOULD BE NORMAL FOR A HAND HAMMER, OR IF MINIMUM ALLOWABLE EDGE DISTANCES ARE NOT MAINTAINED THE PERFORMANCE WILL BE DEEMED UNSATISFACTORY.

4. MACHINE NAILING IS NOT PERMITTED FOR PLYWOOD 5/16" OR LESS IN THICKNESS.

STRUCTURAL COMPOSITE LUMBER

1. STRUCTURAL CAPACITIES FOR STRUCTURAL COMPOSITE LUMBER SHALL BE ESTABLISHED AND MONITORED IN ACCORDANCE WITH ASTM D-5456.

2. STRUCTURAL COMPOSITE LUMBER SHALL BE MANUFACTURED UNDER A CURRENT ICC APPROVAL AND SHALL BE MARKED TO IDENTIFY THE MANUFACTURER, TYPE AND GRADE.

3. THE MOISTURE CONTENT SHALL NOT EXCEED 14% AT THE TIME OF INSTALLATION.

4. PARALLEL STRAND LUMBER SHALL HAVE THE FOLLOWING PROPERTIES: Fb=2900 psi, Fc=2900 psi, Fv=285 psi, AND E=2000 ksi.

5. ACCEPTABLE PARALLEL STRAND LUMBER PRODUCTS ARE AS FOLLOWS:
   a. PARALLAM, MANUFACTURED BY WEYERHAEUSER, INC.
   b. VERSA-LAM, MANUFACTURED BY BOISE-CASCADE, INC.

MANUFACTURER	TRUS JOIST	BOISE CASCADE
ICC-ES REPORT	ESR-1387	ESR-1040
PRODUCT	PSL 2.0	VERSA-LAM 2.0
	M = L 1.9	VERSA-LAM 2.0
	LSL 1.55	VERSA-LAM 1.7
	LSL 1.3	VERSA-LAM 1.4

6. ALL ENGINEERED WOOD PRODUCTS (EWP) SUPPLIED ON THIS PROJECT MUST BE SUPPLIED BY ONE MANUFACTURER. MIXING OF EWP PRODUCT MANUFACTURERS IS NOT PERMITTED AND WILL RENDER THE EWP PRODUCT WARRANTY VOID. THE RESPONSIBLE PARTY WILL BE REQUIRED TO REMOVE AND REPLACE ALL EWP PRODUCTS THAT DO NOT COMPLY.

ALL IDEAS, DESIGNS AND ARRANGEMENTS INDICATED ON THESE DRAWINGS ARE THE PROPERTY OF TKJ STRUCTURAL ENGINEERING, INC., AND ARE INTENDED TO BE USED IN CONNECTION WITH THIS SPECIFIC PROJECT ONLY, AND SHALL NOT BE USED FOR ANY OTHER PURPOSE WHATSOEVER WITHOUT THE WRITTEN CONSENT OF THE ENGINEER.

ROUGH CARPENTRY

1. UNLESS OTHERWISE NOTED, FRAMING LUMBER SHALL BE DOUGLAS FIR LARCH, GRADE-MARKED BY THE WCLIB OR WWPA AS FOLLOWS:

2X JOISTS & RAFTERS	NO. 2
4X & LARGER BEAMS	NO. 1
ALL POSTS	NO. 1
STUDS	NO. 2 OR BETTER
PLATES	NO. 2
LEDGERS	NO. 2
BLOCKING	NO. 3
STRUCTURAL USE PANELS	APA RATED

2. SILL PLATES SHALL BE TREATED DOUGLAS FIR OR FOUNDATION REDWOOD (U.O.N.) EXTERIOR WALLS SILL PLATE SHALL BE SECURED TO CONCRETE WITH 5/8" X 10" LONG ANCHOR BOLTS WITH 7" MINIMUM EMBEDMENT INTO CONCRETE AT A MAXIMUM SPACING OF 48" OC AND 12" FROM EACH END. PLATE WASHERS A MINIMUM OF 2 INCH BY 2 INCH BY 3/16 OF AN INCH THICK SHALL BE USED ON EACH BOLT. (FOR SPECIAL CONDITIONS, SEE SHEAR WALL SCHEDULE FOR SHEAR WALL ANCHORAGE).

3. PRESSURE TREATED DOUGLAS FIR SHALL BE NO. 2 MINIMUM AND BEAR "AWPB." QUALITY MARK AND THE WCLNG GRADE STAMP. CERTIFICATES ARE NOT ACCEPTABLE.

4. NAILS SHALL BE COMMON WIRE. NAILING SHALL COMPLY WITH TABLE 2304.9.1 OF THE BUILDING CODE. NAILS EXPOSED TO WEATHER SHALL BE HOT-DIP GALVANIZED, U.O.N.

5. FRAMING ANCHORS, POST CAPS, COLUMN BASES, HANGERS, ETC. SHALL BE MANUFACTURED BY SIMPSON, OR APPROVED EQUAL.

6. SHEATHING SHALL BE APA-RATED STRUCTURAL USE PANELS CONFORMING TO PRODUCT STANDARD PS 1 FOR PLYWOOD OR PS 2 FOR ORIENTED STRAND BOARD (OSB).

7. FLOOR SHEATHING SHALL BE TONGUE AND GROOVE, INTERIOR TYPE WITH EXTERIOR GLUE, SPAN INDEX (32/16). 2X BLOCKING MAY BE USED AT ALL UNSUPPORTED EDGES IN LIEU OF TONGUE AND GROOVE EDGES. PLYWOOD FLOOR SHEATHING SHALL BE GLUED TO ALL FRAMING MEMBERS WITH AN APA-APPROVED ADHESIVE.

8. ROOF SHEATHING SHALL BE EXTERIOR TYPE WITH EXTERIOR GLUE, SPAN INDEX (24/0).

9. EXTERIOR FRAMED WALLS SHALL BE SHEATHED WITH A MINIMUM OF 3/8" PLYWOOD OR OSB. BOARD. SEE FOUNDATION PLAN AND SHEAR WALL SCHEDULE FOR ADDITIONAL REQUIREMENTS.

10. DO NOT BORE OR NOTCH JOISTS, RAFTERS, OR BEAMS, EXCEPT WHERE SHOWN IN DETAILS. OBTAIN ENGINEER'S APPROVAL FOR ANY HOLES OR NOTCHES NOT DETAILED. HOLES THROUGH SILLS, PLATES, STUDS, AND DOUBLE PLATES IN INTERIOR BEARING AND SHEAR WALLS SHALL NOT EXCEED 1/3 THE PLATE OR STUD WIDTH. USE BORED HOLES LOCATED IN THE CENTER OF THE STUD OR PLATE.

11. PROVIDE 1/2 INCH MINIMUM CLEARANCE BETWEEN TOP PLATES OF INTERIOR NON-BEARING PARTITIONS AND THE BOTTOM CHORD OF TRUSSES.

12. PROVIDE SOLID BLOCKING AT ENDS AND AT SUPPORTS OF FLOOR JOISTS AND ROOF RAFTERS UNDER PARTITIONS AND AT RIDGE LINE.

13. CROSS BRIDGING BETWEEN JOISTS AND RAFTERS MAY BE OMITTED WHERE THE COMPRESSION EDGE IS CONTINUOUSLY CONNECTED TO THE SHEATHING, OTHERWISE PROVIDE BRIDGING PER THE BUILDING CODE. DO NOT EXCEED 8'-0" INTERVALS FOR JOISTS 2" X 12" AND LARGER.

14. STUDS SHALL HAVE FULL BEARING ON PLATE, ALL JOISTS, HEADERS, BEAMS, AND RAFTERS SHALL HAVE A MINIMUM SOLID LEVEL BEARING OF 1.5 INCHES AT EACH END.

15. PROVIDE FIRE BLOCKING OR JOINT BLOCKING BETWEEN STUDS AT NOT LESS THAN 8'-0" VERTICAL INTERVALS AND AT ALL PLYWOOD EDGES.

16. TOP PLATES OF ALL BEARING WOOD STUD WALLS SHALL BE TWO PIECES, SAME SIZE AS STUDS AND LAPPED 4'-0" MINIMUM WITH NOT LESS THAN 10-16d NAILS AT EACH SIDE OF TOP PLATE BREAK POINT SPACED AT 4" OC MAXIMUM UNLESS OTHERWISE NOTED.

17. NOT LESS THAN THREE (3) STUDS SHALL BE INSTALLED AT EVERY CORNER OF AN EXTERIOR OR INTERIOR BEARING WALL.

18. PROVIDE TWO (2) 2X STUD WOOD TRIMMERS UNDER ALL 4X8 OR LARGER BEAMS OR HEADERS, UNLESS OTHERWISE NOTED.21. PROVIDE 2X MINIMUM BACKING FOR ALL WALL HUNG CABINETS, HANDRAILS, SHELVING, LIGHT FIXTURES, ACCESSORIES, ETC.

19. INTERIOR AND EXTERIOR WOOD POSTS ATTACHED DIRECTLY TO CONCRETE SHALL BE SECURED WITH SIMPSON PBS POST BASES, AS APPLICABLE, UNLESS OTHERWISE NOTED.

20. PROVIDE 1X LET-IN BRACING AT ALL EXTERIOR AND INTERIOR BEARING WALLS AT EACH END AND AT LEAST EVERY 25' OR HORIZONTAL WALL LENGTH. THEY SHALL BE PLACED AT AN ANGLE NOT GREATER THAN 60 DEGREES AND NOT LESS THAN 30 DEGREES TO THE HORIZONTAL.

21. BEAMS, JOISTS, RAFTERS, ETC. SHALL BE INSTALLED WITH THE CROWN SIDE UP.

22. BOLT HOLES IN WOOD SHALL BE DRILLED 1/32" TO 1/16" IN DIAMETER LARGER THAN THE NOMINAL BOLT SIZE. RETIGHTEN ALL NUTS PRIOR TO CLOSING IN.

23. BOLTS SHALL HAVE A 7 DIA. MIN. END DISTANCE AND A 4 DIA. EDGE DISTANCE, U.O.N.

REINFORCING STEEL

1. DETAILING, FABRICATION AND ERECTION OF REINFORCING BARS SHALL FOLLOW ACI 315, "DETAILS AND DETAILING OF CONCRETE REINFORCEMENT."

2. REINFORCING BARS SHALL CONFORM TO ASTM A 615, GRADE 60, U.O.N.

3. REINFORCING BAR LAP SPLICES SHALL BE CLASS B. (18" MIN.) FOR CONCRETE, U.O.N. 65 BAR DIA. (24"MIN.) FOR MASONRY, U.O.N.

4. DETAILS OF REINFORCEMENT SHALL COMPLY WITH ACI 318, CHAPTER 7.

5. REINFORCING BARS FOR CONCRETE SHALL BE PROVIDED WITH THE FOLLOWING MINIMUM COVER:

CONC. CAST AGAINST EARTH	3"
FORMED CONC. EXPOSED TO EARTH/ WEATHER	
#5 OR SMALLER	1-1/2"
#6 OR LARGER	2"
SLABS (#11 AND SMALLER)	3/4"

6. #3 SPACER TIES SHALL BE INSTALLED AT 30" ON CENTER IN ALL BEAMS AND FOOTINGS TO SECURE REINFORCING BARS IN PLACE, U.O.N.

REINFORCED CONCRETE (GENERAL)

1. CONCRETE CONSTRUCTION SHALL CONFORM WITH CHAPTER 19 OF THE BUILDING CODE AND TO THE PROVISIONS OF ACI 318, LATEST EDITION.

2. READY MIX CONCRETE SHALL BE MIXED AND DELIVERED IN ACCORDANCE WITH ASTM C 94.

3. CEMENT SHALL CONFORM TO ASTM C 150 TYPE I OR II, LOW ALKALI.

4. AGGREGATES FOR NORMAL WEIGHT CONCRETE SHALL CONFORM TO ASTM C 33.

5. NORMAL WEIGHT CONCRETE SHALL HAVE A MAXIMUM DRY DENSITY OF 150 PCF.

6. CONCRETE MIXES SHALL BE DESIGNED BY A QUALIFIED TESTING LABORATORY AND APPROVED BY THE ENGINEER. MIX DESIGN METHODS (TEST HISTORY OR TRIAL BATCH METHOD) IN ACCORDANCE WITH ACI 318, SECTION 5.3 SHALL BE USED TO PROPORTION CONCRETE.

7. MINIMUM CONCRETE COMPRESSIVE STRENGTHS AT 28 DAYS, MAXIMUM SLUMPS, AND MAXIMUM WATER/CEMENT RATIOS SHALL BE AS FOLLOWS:

DESCRIPTION	MIN 28 DAY fc	SLUMP	MAX. W/C RATIO
FOOTINGS	3000 PSI	4"+/-1"	0.5
SLAB ON GRADE	3000 PSI	4"+/-1"	0.5

8. ADMIXTURES SHALL BE APPROVED IN ADVANCE.

9. SLUMPS INDICATED ARE PRIOR TO PLASTICIZER ADDITIVES.

10. CONCRETE ADMIXTURES CONTAINING CHLORIDE OR CHLORIDE SALTS SHALL NOT BE USED EXCEPT WHERE APPROVED IN WRITING BY THE ENGINEER.

11. FLYASH SHALL BE LIMITED TO NO MORE THAN THE FOLLOWING PERCENTAGES OF THE TOTAL WEIGHT OF CEMENTITIOUS MATERIALS IN THE CONCRETE, U.O.N.

FOUNDATIONS	20%
SLABS ON GRADE	20%

12. CONCRETE EXPOSED TO WEATHER SHALL BE AIR ENTRAINED.

13. WATER MAY BE ADDED ON SITE TO OBTAIN SPECIFIED SLUMPS PROVIDED THAT IT IS ADDED WITHIN ONE HOUR OF BATCHING AND SITE-ADDED WATER IS SPECIFIED ON THE BATCH REPORT. SITE-ADDED WATER SHALL NOT COMPROMISE THE STRENGTH OR SLUMP OF THE CONCRETE.

14. CONCRETE SHALL NOT BE PLACED BEYOND 1-1/2 HOURS FOLLOWING BATCHING.

15. PROJECTING CORNERS OF SLABS, BEAMS, WALLS, COLUMNS, ETC., SHALL BE FORMED WITH A 3/4" CHAMFER U.O.N.

16. THE CONCRETE SLAB-ON-GRADE AND TOPPING FILL THICKNESS SHOWN IS THE MINIMUM REQUIRED THICKNESS. FLOORS SHALL BE MONITORED BY TRANSIT LEVEL OR LASER DURING PLACEMENT TO MAINTAIN LEVEL FLOOR.

17. CONCRETE SHALL BE MAINTAINED IN A MOIST CONDITION FOR A MINIMUM OF 7 DAYS AFTER ITS PLACEMENT. APPROVED CURING COMPOUNDS MAY BE USED IN LIEU OF MOIST CURING.

TEMPORARY WORK AND SITE SAFETY

1. THE STRUCTURAL DRAWINGS SHOW THE REQUIREMENTS FOR THE COMPLETED STRUCTURE ONLY. TEMPORARY WORKS REQUIRED TO COMPLETE THE CONSTRUCTION PROCESS SHALL BE THE RESPONSIBILITY OF THE CONTRACTOR. THE STRUCTURAL ENGINEER SHALL NOT BE RESPONSIBLE FOR THE DESIGN OR FIELD VERIFICATION OF TEMPORARY AND ANCILLARY WORK.

2. THE RESPONSIBILITY FOR SAFETY IN AND AROUND THE JOBSITE SHALL BEAR ON THE CONTRACTOR. PROPER AND SAFE METHODS OF CONSTRUCTION SHALL BE EMPLOYED AT ALL TIMES INCLUDING THE STABILIZING OF INCOMPLETE STRUCTURES, FORMWORK, SHORING, RESHORING, FALSEWORK, PLATFORMS, SCAFFOLDING, BARRIERS, WALKWAYS, ETC. AND INCLUDING CONTROL OF THE INTENSITY, DURATION AND LOCATION OF CONSTRUCTION LOADS.

3. THE RESPONSIBILITY FOR THE DESIGN AND INSTALLATION OF ALL CRIBBING, SHEATHING, UNDERPINNING, AND SHORING REQUIRED TO SAFELY RETAIN ALL GRADES AND STRUCTURES SHALL BEAR ON THE CONTRACTOR.

4. CONSTRUCTION MATERIALS SHALL BE SPREAD OUT IF PLACED ON A STRUCTURE. LOADS SHALL NOT EXCEED THE DESIGN LIVE LOAD INDICATED. WHERE THE STRUCTURE HAS NOT ATTAINED FINAL DESIGN STRENGTH, ADEQUATE SHORING AND OR BRACING SHALL BE INSTALLED.

FOUNDATION

1. THE RECOMMENDATIONS PROVIDED IN THE GEOTECHNICAL INVESTIGATION REPORT SHALL BE FOLLOWED:

   BY: SHN Consulting Engineers & Geologists, Inc.
   DATED: September 27, 2017
   PROJECT NO: 417083

2. DEVIATIONS IN GEOTECHNICAL CONDITIONS FROM THOSE DESCRIBED IN THE GEOTECHNICAL REPORT SHALL BE REPORTED TO THE STRUCTURAL AND GEOTECHNCIAL ENGINEERS IN A TIMELY MANNER.

3. THE MAXIMUM ALLOWABLE SOIL BEARING PRESSURE SHALL BE 2500 psf, AND MAY BE INCREASED BY 1/3 FOR WIND AND SEISMIC LOAD CASES.

4. THE EXPANSION INDEX HAS BEEN DETERMINED TO BE 50 OR LESS AND NO SPECIAL DESIGN RECOMMENDATIONS ARE REQUIRED.

5. FOOTING AND UTILITY TRENCH BACKFILL SHALL BE MECHANICALLY COMPACTED IN LAYERS SUBJECT TO THE APPROVAL OF THE GEOTECHNICAL ENGINEER. FLOODING WILL NOT BE PERMITTED.

6. LOOSE SOIL AND FILL MATERIAL SHALL BE COMPACTED ACCORDING TO THE REQUIREMENTS OF THE SOILS REPORT.

7. COMPACTION TEST REPORTS FOR FILL BY A QUALIFIED TESTING LAB SHALL BE SUBMITTED TO THE STRUCTURAL ENGINEER, GEOTECHNICAL ENGINEER AND BUILDING OFFICIAL PRIOR TO THE REQUESTING FOUNDATION INSPECTION.

8. FOOTING DEPTHS INDICATED ON THE STRUCTURAL DRAWINGS ARE FOR BIDDING PURPOSES ONLY AND ARE ASSUMED TO BE IN SUITABLE BEARING MATERIALS. THE GEOTECHNICAL ENGINEER MAY REQUIRE FOUNDATIONS DEPTHS TO BE INCREASED. THE RESPONSIBILITY FOR CONFORMING TO THE GEOTECHNICAL REPORT RECOMMENDATIONS REGARDING DEPTH OF FOOTINGS SHALL BEAR ON THE CONTRACTOR.

9. FOOTING ELEVATIONS SHALL BE LOCATED SUCH THAT THEIR BEARING IS A MINIMUM HORIZONTAL DISTANCE OF 10 FEET FROM THE DAYLIGHT OF AN ADJACENT SLOPE OR AS RECOMMENDED WITHIN THE GEOTECHNICAL REPORT.

10. ANCHOR BOLTS, DOWELS AND HOLD-DOWN ANCHORS SHALL BE TIED IN PLACE PRIOR TO FOUNDATION INSPECTION.

11. WALLS RETAINING EARTH SHALL BE DRAINED AND BACKFILLED ACCORDING TO THE RECOMMENDATIONS WITHIN THE GEOTECHNICAL REPORT.

12. BACKFILLING BEHIND RETAINING WALLS SHALL NOT BEGIN UNTIL WALLS HAVE BEEN CURED FOR A MINIMUM OF 14 DAYS.

BASIS OF DESIGN

1. THE STRUCTURAL DESIGN HAS BEEN PERFORMED IN ACCORDANCE WITH THE 2016 CALIFORNIA BUILDING CODE (C.B.C.)

2. DESIGN LOADS (LIVE LOADS MAY BE REDUCED IN ACCORDANCE WITH THE BUILDING CODE)

	LL
ROOF	20 psf
FLOOR	40 psf

3. SEISMIC DESIGN DATA : ASCE 7-10

OCCUPANCY CATEGORY	II
SEISMIC IMPORTANCE FACTOR	Ie = 1.0
MAPPED SPECTRAL ACCELERATION	Ss = 2.069 g
MAPPED SPECTRAL ACCELERATION	S1 = 0.844 g
SITE CLASS	D
SITE COEFFICIENT	Fa = 1.000
SITE COEFFICIENT	Fv = 1.5
SEISMIC DESIGN CATEGORY	E
ANALYSIS PROCEDURE USED	EQUIV LATERAL FORCE
SEISMIC FORCE RESISTING SYSTEM	WOOD SHEARWALLS
RESPONSE MODIFICATION FACTOR	R = 6.5
SYSTEM OVERSTRENGTH FACTOR	Ω = 2.5
DEFLECTION AMPLIFICATION FACTOR	Cd = 4.0

4. WIND DESIGN DATA : ASCE 7-10

BASIC WIND SPEED	V = 110 mph
EXPOSURE CATEGORY	C
ENCLOSURE CATEGORY	ENCLOSED
GUST & INTERNAL PRESSURE COEFF	GCpi = 0.18
DIRECTIONALITY FACTOR	Kd = 0.85
TOPOGRAPHIC FACTOR	Kzt = 1.00

5. SNOW DESIGN DATA : ASCE 7-10

GROUND SNOW LOAD	Pg =
IMPORTANCE FACTOR	Is = 1.0
EXPOSURE FACTOR	Ce =
THERMAL FACTOR	Ce = 1.0

GENERAL

1. SPECIFIC NOTES AND DETAILS ON THE STRUCTURAL DRAWINGS SHALL TAKE PRECEDENCE OVER GENERAL NOTES AND TYPICAL DETAILS.

2. WHERE NO DETAILS ARE SHOWN OR NOTED IN ANY PART OF THE WORK THE DETAILS FOR OTHER SIMILAR WORK SHALL APPLY.

3. DETAILS IDENTIFIED AS TYPICAL, SHALL APPLY IN ESTIMATING AND CONSTRUCTION TO EVERY LIKE CONDITION WHETHER OR NOT THE REFERENCE IS REPEATED.

4. THE STRUCTURAL DRAWINGS SHALL NOT BE SCALED. COORDINATE DIMENSIONS WITH ARCHITECTURAL DRAWINGS.

5. COORDINATE ELEVATIONS, SLOPES AND DRAINAGE REQUIREMENTS WITH THE ARCHITECTURAL DRAWINGS.

6. STANDARDS REFERENCED ON THE STRUCTURAL DRAWINGS REFER TO THE EDITION APPLICABLE UNDER THE CURRENT BUILDING CODE.

7. THE RESPONSIBILITY FOR THE REVIEW AND COORDINATION OF DRAWINGS AND SPECIFICATIONS PRIOR TO THE START OF RELATED CONSTRUCTION SHALL BEAR ON THE CONTRACTOR. DISCREPANCIES THAT EXIST SHALL BE BROUGHT TO THE ATTENTION OF THE ENGINEER IN A TIMELY MANNER, PRIOR TO START OF RELATED CONSTRUCTION.

8. WORK PERFORMED IN CONFLICT WITH THE STRUCTURAL DRAWINGS OR APPLICABLE BUILDING CODE REQUIREMENTS SHALL BE CORRECTED AT THE EXPENSE OF THE CONTRACTOR.

9. DIMENSIONS, ELEVATIONS, AND SITE CONDITIONS SHALL BE VERIFIED BEFORE STARTING RELATED WORK AND THE ENGINEER NOTIFIED OF DISCREPANCIES IN A TIMELY MANNER.

10. SITE CONDITIONS THAT ARE NOT REFLECTED ON THE STRUCTURAL DRAWINGS OR THAT DEVIATE FROM THE MAXIMUM OR MINIMUM DIMENSIONS INDICATED SHALL BE BROUGHT TO THE ATTENTION OF THE ENGINEER IN A TIMELY MANNER. SUCH CONITIONS MAY INCLUDE CONFLICT IN GRADES, ADVERSE SOIL CONDITIONS, GROUND WATER PRESENT, DEEPENED FOOTINGS, UNCOVERED AND UNEXPECTED UTILITY LINES, ETC.

11. MATERIALS AND WORKMANSHIP SHALL CONFORM TO REQUIREMENTS OF APPLICABLE REGULATIONS AND THE BUILDING CODE AS AMENDED AND ADOPTED BY THE BUILDING OFFICIAL.

12. LOADS TO THE BUILDING EXCEEDING THE LOADS INDICATED ON THE PLANS, OR ANY LOADS EXCEEDING 400 POUNDS THAT ARE NOT INDICATED ON THE STRUCTURAL DRAWINGS SHALL BE REPORTED TO THE ENGINEER.

TRAVOIS
ARCHITECTURE, PC

Coyote Valley Homes I, LIHTC

Redwood Valley, California

ENGINEER

TKJ STRUCTURAL ENGINEERING
9820 Willow Creek Rd., Ste. 455
San Diego, California 92131
858.649.1700 | www.tkjse.com

STAMP

REVISIONS	DATE
40% CDs	07/28/17
Progress Set	09/01/17
75% CDs	09/26/17
100% CDs	10/27/17

S000

STRUCTURAL NOTES

17065

ALL IDEAS, DESIGNS AND ARRANGEMENTS INDICATED ON THESE DRAWINGS ARE THE PROPERTY OF TKJ STRUCTURAL ENGINEERING, INC., AND ARE INTENDED TO BE USED IN CONNECTION WITH THIS SPECIFIC PROJECT ONLY, AND SHALL NOT BE USED FOR ANY OTHER PURPOSE WHATSOEVER WITHOUT THE WRITTEN CONSENT OF THE ENGINEER.

STRUCTURAL OBSERVATIONS

1. DUE TO THE SCOPE AND NATURE OF THIS PROJECT, STRUCTURAL OBSERVATION IS NOT REQUIRED.

GLUE-LAMINATED WOOD MEMBERS

1. MOISTURE CONTENT SHALL NOT EXCEED 14%, WITH A 4% MAXIMUM VARIATION IN ANY MEMBER.
2. UNLESS OTHERWISE NOTED, FABRICATION AND ADHESIVES SHALL BE FOR WET USE, COMPLYING WITH US COMMERCIAL STANDARD CS 253-63, AND SHALL BE COMPATIBLE WITH PRESSURE TREATMENT WHERE EXPOSED TO WEATHER.
3. CONTRACTOR SHALL SUBMIT SHOP DRAWINGS DETAILING THE SIZE, LENGTH, CAMBER AND LOCATIONS OF THE GLUE-LAM BEAMS TO THE STRUCTURAL ENGINEER FOR APPROVAL. NO CUTTING OR NOTCHING OF GLUE-LAM BEAMS IS ALLOWED
4. PRIOR TO INSTALLATION, SUPPLIER SHALL PROVIDE AN AITC CERTIFICATE OF COMPLIANCE FOR GLUE-LAMINATED WOOD MEMBERS TO THE BUILDING OFFICIAL.
5. CAMBER ALL GLUE-LAM MEMBERS ON 2,000 FOOT RADIUS BETWEEN SUPPORTS, TYPICAL UNLESS NOTED OTHERWISE ON PLANS.
6. LUMBER SHALL BE DOUGLAS FIR, WCLIB GRADING AND DRESSING RULES AND WCLA SPECIFICATIONS FOR STRUCTURAL LAMINATED DOUGLAS FIR TIMBER. STRUCTURAL GLUE-LAMINATED TIMBER SHALL CONFORM TO AITC STANDARD A 190.1 AND ASTM D 3737, DESIGN AND MANUFACTURE OF STRUCTURAL GLUED-LAMINATED TIMBER, AND SHALL BE OF INDUSTRIAL GRADE WHERE HIDDEN FROM VIEW AND ARCHITECTURAL GRADE WHERE VISIBLE, WITH ENDS SEALED UNLESS OTHERWISE NOTED.
7. GLUE-LAM BEAMS SHALL BE OF DF/DF INDUSTRIAL GRADE 24F-V4, V8 AT CANTILEVERED GLB, (Fb=2400 psi, Fc=1650 psi, Fv=265 psi, AND E=1.8E6 psi FOR FLEXURAL), U.O.N. ON THE DRAWINGS. TENSION LAMINATION REQUIRED AT TOP AND BOTTOM OF ALL CANTILEVERED GLU-LAM BEAMS.

REINFORCED CONCRETE MASONRY UNITS (CMU)

1. MASONRY CONSTRUCTION SHALL CONFORM TO CHAPTER 21 OF THE BUILDING CODE AND ACI 530.1.
2. CONCRETE MASONRY CONSTRUCTION SHALL HAVE A MINIMUM 28 DAY COMPRESSIVE STRENGTH OF f'm=1,500psi.
3. CONCRETE MASONRY UNITS SHALL CONFORM TO ASTM C 90, MEDIUM WEIGHT, SINGLE OPEN-END UNITS, U.O.N.
4. MORTAR SHALL CONFORM TO ASTM C 270, TYPE "S".
5. GROUT SHALL CONFORM TO ASTM C 476. GROUT MIX DESIGNS SHALL BE SUBMITTED TO THE ENGINEER FOR APPROVAL.
6. STRENGTH VERIFICATION OF MASONRY SHALL BE BY THE UNIT STRENGTH METHOD IN ACCORDANCE WITH SECTION 2105.2.2.1.2 OF THE BUILDING CODE. WHERE THE UNIT STRENGTH METHOD IS USED, MASONRY COMPONENTS SHALL HAVE THE FOLLOWING STRENGTHS:

MINIMUM COMPRESSIVE STRENGTHS	f'm = 2,000psi
MASONRY UNITS	2,000 psi
GROUT	3,000 psi

7. VERTICAL BARS IN WALLS SHALL BE PLACED IN THE CENTER OF THE WALL UNLESS OTHERWISE INDICATED. VERTICAL BARS SHALL BE TIED OR OTHERWISE FIXED IN POSITION AT THE TOP AND BOTTOM AND AT INTERVALS OF NOT MORE THAN 200 BAR DIAMETERS.
8. HORIZONTAL BARS SHALL BE PLACED IN BOND BEAM UNITS.
9. MASONRY UNITS SHALL BE PLACED IN A RUNNING BOND PATTERN, U.O.N.
10. MASONRY CELLS SHALL BE SOLID GROUTED, U.O.N.
11. A GROUT POUR SHALL BE THE TOTAL HEIGHT OF MASONRY THAT IS GROUTED PRIOR TO THE ERECTION OF ADDITIONAL MASONRY. A GROUT POUR SHALL NOT EXCEED THE HEIGHT LIMITS GIVEN IN ACI 530.1, TABLE 7 AND MAY CONSIST OF ONE OR MORE GROUT LIFTS.
12. A GROUT LIFT SHALL BE THE HEIGHT OF GROUT THAT IS PLACED IN A SINGLE, CONTINUOUS OPERATION BEFORE CONSOLIDATION OF GROUT. GROUT LIFTS SHALL NOT EXCEED 5'-0" IN HEIGHT, UNLESS THE FOLLOWING CONDITIONS ARE MET:
    A. MASONRY IS ALLOWED TO CURE FOR A MINIMUM OF 4 HOURS PRIOR TO GROUTING.
    B. GROUT SLUMP IS MAINTAINED BETWEEN 10 AND 11 INCHES AS VERIFIED BY TESTING.
    C. LIFTS ARE LIMITED TO A HEIGHT BETWEEN HORIZONTAL BOND BEAMS, OR A MAXIMUM OF 12'-8".
13. GROUT SHALL BE CONSOLIDATED BY MECHANICAL VIBRATION. WHERE LIFTS EXCEED 12 INCHES, GROUT SHALL BE RE-CONSOLIDATED BY MECHANICAL VIBRATION AFTER INITIAL WATER LOSS AND SETTLEMENT.
14. INSPECTION AND CLEAN OUT HOLES SHALL BE PROVIDED AT THE BASE OF GROUTED CELLS WHERE A GROUT POUR EXCEEDS 5'-0" IN HEIGHT. HOLD SPACING SHALL NOT EXCEED 32 INCHES ON CENTER.
15. WHEN GROUTING IS STOPPED FOR ONE HOUR OR LONGER, HORIZONTAL CONSTRUCTION JOINTS SHALL BE FORMED BY STOPPING THE GROUT POUR 1-1/2" BELOW TOP OF THE UPPERMOST UNIT.

PREMANUFACTURED ROOF TRUSSES

1. SHOP DRAWINGS AND CALCULATIONS SHALL INCLUDE THE FOLLOWING MINIMUM INFORMATION:
    A. PROJECT NAME AND LOCATION.
    B. DESIGN LOADS AND LOAD CONFIGURATIONS.
    C. MEMBER STRESSES, DEFLECTIONS AND ALLOWABLE DESIGN VALUES.
    D. TYPE, SIZE, AND LOCATION OF HANGERS TO BE USED TO SUPPORT THE TRUSSES. HANGERS SHALL CARRY AN ICC APPROVAL.
2. TRUSSES SHALL BE DESIGNED IN ACCORDANCE WITH THE LATEST LOCAL APPROVED BUILDING CODES AND ORDINANCES FOR ALL LOADS IMPOSED, INCLUDING LATERAL, MECHANICAL EQUIPMENT, AND FIRE SPRINKLER LOADS. FABRICATOR SHALL REVIEW ALL DRAWINGS AND MEET PROFILES AS INDICATED.
3. DESIGN AND CONSTRUCTION OF CONNECTIONS SHALL BE IN ACCORDANCE WITH PUBLISHED APPROVALS OF ICC. HEEL JOINT DESIGN SHALL CONSIDER THE EFFECTS OF ECCENTRIC LOADING IN ACCORDANCE WITH SECTION 233.4 OF THE BUILDING CODE.
4. INCREASES IN ALLOWABLE STRESSES FOR REPETITIVE MEMBERS, ARE NOT PERMISSIBLE.
5. TRUSS DESIGNERS TO ACCOUNT FOR THE WEIGHT OF ALL MECHANICAL EQUIPMENT IN THE DESIGN OF ALL TRUSSES FROM FIRE SPRINKLER LINE. TRUSS MUST BE DESIGNED TO CARRY THE LOAD AT ANY PANEL POINT ALONG THE BOTTOM CHORD.
6. THE MANUFACTURER SHALL BE RESPONSIBLE FOR THE DESIGN OF MEMBERS USED AS DRAG OR CHORD MEMBERS AND SHALL INSURE THAT SUCH MEMBERS ARE PLACED AS REQUIRED ON THE FRAMING PLANS. THE AMOUNT OF LOAD TO BE LATERALLY TRANSMITTED BY THE MEMBER SHALL BE A MINIMUM OF 2000 POUNDS U.O.N. ON THE FRAMING PLANS.
7. CROSS BRIDGING AND/OR BRACING SHALL BE PROVIDED FOR, AND DETAILED BY, THE MANUFACTURER AS REQUIRED TO ADEQUATELY BRACE TRUSSES.
8. PROVIDE ADEQUATE CAMBER FOR DESIGNATED DESIGN LOADS.
9. MAXIMUM FLOOR AND ROOF DEFLECTIONS:

	LIVE LOAD	TOTAL LOAD
ROOF	L/360	L/240

10. EACH TRUSS SHALL BE LEGIBLY MARKED WITH THE FOLLOWING INFORMATION WITHIN TWO FEET OF THE CENTER OF THE SPAN ON THE FACE OF THE BOTTOM OF THE CHORD:
    MANUFACTURER'S NAME
    DESIGN LOADS
    TRUSS SPACING
11. HARDWARE REQUIRED FOR CONNECTING TRUSSES (JACK TO HIP, HIP TO GIRDER OR GIRDER TO GIRDER, ETC.) SHALL BE DESIGNED, DETAILED AND PROVIDED BY TRUSS FABRICATOR.
12. TRUSS DESIGNER SHALL OVERSIZE PLATES FOR CHORD MEMBERS TO ACCOUNT FOR WOOD DEFECTS LIKE KNOTS, KNOT HOLES AND GREATLY DISTORTED GRAINS. MAXIMUM ALLOWABLE DEFECT SIZE PER MEMBER SHALL BE 2 SQUARE INCHES. NO DEFECTS ALLOWED UNDER PLATES FOR WEB MEMBERS.
13. MULTIPLE CHORDS SHALL BE FACTORY LAMINATED.
14. GABLE END TRUSSES SHALL HAVE 2X VERTICALS AT 16" OC TYPICAL UNLESS OTHERWISE NOTED.
15. TRUSS MANUFACTURER TO VERIFY ALL DIMENSIONS SHOWN ON STRUCTURAL DRAWINGS WITH ARCHITECTURAL DRAWINGS AND IN FIELD WITH WALL LAYOUT PRIOR TO FABRICATION. PROVIDE SHOP DRAWINGS WHICH SHALL INCLUDE PLAN DRAWING SHOWING TRUSS LOCATIONS AND TRUSS PROFILES, WITH DIMENSIONS REVIEWED AND APPROVED BY GENERAL CONTRACTOR, PRIOR TO FABRICATION.
16. GENERAL CONTRACTOR TO PROVIDE TEMPORARY ERECTION BRACING AND WEB BRACING AS REQUIRED BY TRUSS MANUFACTURER'S DESIGN.
17. WHERE TRUSSES BLOCKING IS CALLED OUT, THE BLOCKING PIECE SHALL BE THE SAME DEPTH AS THE ADJOINING MEMBERS AND CAPABLE OF RESISTING A LATERAL LOAD EQUAL TO 500 POUNDS IN ITS PLANE, OR BE SHEATHED SOLID WITH 1/2" CDX PLYWOOD AND NAILED WITH 10d COMMON NAILS AT 6" (EN) U.O.N. ON THE FRAMING PLANS.
18. FIRE SPRINKLER INSTALLER SHALL USE CONNECTORS WITH ICC APPROVAL.
19. 18" ENERGY HEEL SHALL BE REQUIRED ON ALL ROOF TRUSSES AT EXTERIOR WALLS.

TRAVOIS
ARCHITECTURE, PC

Coyote Valley Homes I, LIHTC

Redwood Valley, California

ENGINEER

TKJ STRUCTURAL ENGINEERING
9820 Willow Creek Rd., Ste. 455
San Diego, California 92131
858.649.1700 | www.tkjse.com

STAMP

REVISIONS	DATE
40% CDs	07/28/17
Progress Set	09/01/17
75% CDs	09/26/17
100% CDs	10/27/17

S001

STRUCTURAL NOTES

17065

ABBREVIATIONS

(E)	EXISTING
(N)	NEW
ABV	ABOVE
ADDL	ADDITIONAL
ADJ	ADJACENT
AESS	ARCHITECTURALLY EXPOSED STRUCTURAL STEEL
ALT	ALTERNATE
APPRX	APPROXIMATE
AR	ANCHOR RODS
ARCH	ARCHITECT OR ARCHITECTURAL
B /	BOTTOM OF
B / B	BACK TO BACK
BAL	BALANCE
BF	BRACED FRAME
BLDG	BUILDING
BLK	BLOCK
BLKG	BLOCKING
BLW	BELOW
BM	BEAM
BOT	BOTTOM
BRDG	BRIDGING
BRG	BEARING
BS	BOTH SIDES
BTWN	BETWEEN
C	COMPRESSION
C / C	CENTER TO CENTER
CIP	CAST - IN - PLACE
CJP	COMPLETE JOINT PENETRATION
CL	CENTER LINE
CLR	CLEAR OR CLEARANCE
CMU	CONCRETE MASONRY UNIT
COL	COLUMN
COMP	COMPRESSION
CONC	CONCRETE
CONN	CONNECTION(S)
CONST	CONSTRUCTION
CONT	CONTINUOUS
CTR	CENTERED
CTRSK	COUNTERSINK
db	DIAMETER OF BOLT OR REBAR
DBL	DOUBLE
DCW	DEMAND CRITICAL WELD
DEG	DEGREE(S)
DET	DETAIL
DF	DOUGLAS FIR
DIA	DIAMETER
DIAG	DIAGONAL
DIM(S)	DIMENSION(S)
DL	DEAD LOAD
DWG(S)	DRAWINGS
DWL	DOWEL(S)
EA	EACH
ECC	ECCENTRICITY
EF	EACH FACE
EL	ELEVATION
ELEC	ELECTRICAL
EN	EDGE NAIL
ENGR	ENGINEER
EOS	EDGE OF SLAB
EQ	EQUAL
EQUIP	EQUIPMENT
EW	EACH WAY
EXP	EXPANSION
EXT	EXTERIOR
F /	FACE OF
F / F	FACE TO FACE
FF	FINISH FLOOR
FIN	FINISH(ED)
FLR	FLOOR
FND	FOUNDATION
FP	FIREPROOF(ING)
FRM'G	FRAMING
FS	FAR SIDE
FTG	FOOTING
GA	GAGE, GAUGE
GALV	GALVANIZED
GB	GRADE BEAM
GEN	GENERAL
GLB	GLUE - LAM - BEAM
GR	GRADE
HD	HOLDOWN
HK	HOOK
HORIZ	HORIZONTAL
HP	HIGH POINT
HSS	HOLLOW STRUCTURAL SECTION (TUBE STEEL)
HT	HEIGHT
ID	INSIDE DIAMETER
IF	INSIDE FACE
INFO	INFORMATION
INT	INTERIOR
INTRM	INTERMEDIATE
JH	JOIST HANGER
JSTS(S)	JOISTS
JT	JOINT
K	KIPS (1,000 POUNDS)
KLF	KIP PER LINEAR FOOT
KSF	KIP PER SQUARE FOOT
LBS	POUNDS
LCS	LAP COMPRESSION SPLICE
LL	LIVE LOAD
LLH	LONG LEG HORIZONTAL
LLV	LONG LEG VERTICAL
LONG	LONGITUDINAL
LP	LOW POINT
LSL	LAMINATED STRAND LUMBER
LTS	LAP TENSION SPLICE OR CLASS "B" LAP SPLICE
LVL	LAMINATED VENEER LUMBER
LW	LIGHTWEIGHT
LWC	LIGHTWEIGHT CONCRETE
M	MOMENT
MATL	MATERIAL
MAX	MAXIMUM
MB	UNFINISHED MACHINE BOLT
MC	MOMENT CONNECTION(S)
MECH	MECHANICAL
MEP	MECHINICAL, ELECTRICAL, PLUMBING, FIRE PROTECTION
MEZZ	MEZZANINE
MFR	MAUFACTURER
MID	MIDDLE
MIN	MINIMUM
MISC	MISCELLANEOUS
NIC	NOT IN CONTRACT
NO	NUMBER
NOM	NOMINAL
NS	NEAR SIDE
NTS	NOT TO SCALE
Nvd	NUMBER OF DIAGONAL SHEAR REINF BARS IN LINK BEAM
NW	NORMAL WEIGHT
NWC	NORMAL WEIGHT CONCRETE
o/c	ON CENTER
OD	OUTSIDE DIAMETER
OH	OPPOSITE HAND
OPNG(S)	OPENING(S)
OPP	OPPOSITE
OSB	ORIENTED STRAND BOARD
OSL	OUTSTANDING LEG
P/T	POST - TENSIONED
PAF	POWDER ACTUATED FASTENER
PC	PIECE
PCY	POUNDS PER CUBIC YARD
PERP	PERPENDICULAR
PG	PLATE GIRDER
PJP	PARTIAL JOINT PENETRATION
PL	PLATE
PLY	PLYWOOD
PRC	PRECAST
PRLL	PARALLEL
PSF	POUNDS PER SQUARE FOOT
PSI	POUNDS PER SQUARE INCH
PSL	PARALLEL STRAND LUMBER
PT	POINT
RAD	RADIUS
REF	REFERENCE
REINF	REINFORCE(D)(ING) OR (MENT)
REQD	REQUIRED
RWD	REDWOOD
SCHED	SCHEDULE(D)
SDL	SUPERIMPOSED DEAD LOAD
SECT	SECTION
SER	STRUCTURAL ENGINEER OF RECORD
SF	SQUARE FOOT (FEET)
SHT	SHEET
SIM	SIMILAR
SLRS	SEISMIC LOAD RESISTING SYSTEM
SMRF	SPECIAL MOMENT RESISTING FRAME
SMS	SHEET METAL SCREW(S)
SOG	SLAB ON GRADE
SP	SPACE
SPEC(S)	SPECIFICATIONS
SQ	SQUARE
STD	STANDARD
STL	STEEL
STR	STRUCTURE
STRCTL	STRUCTURAL
SYMM	SYMMETRICAL
T	TENSION
T&B	TOP AND BOTTOM
T/	TOP OF
TD	TIE DOWN
TEMP	TEMPERATURE OR TEMPORARY
TEN	TENSION
THK	THICK OR THICKNESS
THRD	THREADED
TRANSV	TRANSVERSE
TYP	TYPICAL
UON	UNLESS OTHERWISE NOTED
V	SHEAR
VERT	VERTICAL
VIF	VERIFY IN FIELD
VLAM	VERSALAM
W/	WITH
W/0	WITHOUT
WD	WOOD
WF	WIDE FLANGE
WP	WORK POINT
WPFG	WATERPROOFING
WS	WATERSTOP
WT	WEIGHT
WWR	WELDED WIRE REINFORCEMENT

LEGEND

A	SHEARWALL PER SCHED, X / S1.X
HDU2	HOLDOWN PER SCHED, X / S1.X
HDR	HEADER PER SCHED, X / S1.X
	DBL 2x KING STUD @ ALL WALL OPENINGS, TYP U.O.N.
TRUSS @ 24"	PRE-MANUFACTURED TRUSS, U.O.N. ARROWS INDICATE DIRECTION OF TRUSS SPAN

FOUNDATION SHEET NOTES

1. SURFACE SHALL DRAIN AWAY FROM BUILDING. REFER TO ARCHITECTURAL DRAWINGS FOR DRAINAGE PATTERN. GRADE SHALL FALL A MINIMUM OF 4% WITHIN 10 FEET OF ALL BUILDING FOUNDATIONS.
2. REFERENCE GEOTECHNICAL REPORT FOR FOUNDATION REQUIREMENTS.
3. ALL FOOTINGS SHALL BE OF A SUFFICIENT DEPTH SUCH THAT THE BEARING SURFACE IS NO LESS THAN 10' - 0" TO DAYLIGHT.

FRAMING SHEET NOTES

1. LEVEL 1 T.O. PLATE HT = 8' - 1" TYP, U.O.N.
   LEVEL 2 T.O. PLATE HT = 17' - 2" TYP, U.O.N.
   VERIFY TOP PLATE HEIGHTS w/ ARCH
2. STRUCTURAL CALCULATIONS AND DRAWINGS FOR THE PREMANUFACTURED ROOF TRUSSES, SIGNED AND SEALED BY A CALIFORNIA REGISTERED CIVIL ENGINEER, SHALL BE SUBMITTED TO THE ENGINEER OF RECORD FOR REVIEW AND COORDINATION PRIOR TO INSTALLATION OF TRUSSES. MODIFICATIONS TO THE STRUCTURAL DRAWINGS MAY BE REQUIRED, PENDING REVIEW.
3. ALL DRAG TRUSS LOADS NOTED ON PLAN ARE UNFACTORED (STRENGTH LEVEL).
4. ALL ENGINEERED WOOD PRODUCTS (EWP) SUPPLIED ON THIS PROJECT MUST BE SUPPLIED BY ONE MANUFACTURER. MIXING OF EWP PRODUCT MANUFACTURERS IS NOT PERMITTED AND WILL RENDER THE EWP PRODUCT WARRANTY VOID. THE RESPONSIBLE PARTY WILL BE REQUIRED TO REMOVE AND REPLACE ALL EWP PRODUCTS THAT DO NOT COMPLY.

TRAVOIS
ARCHITECTURE, PC

Coyote Valley Homes I, LIHTC

Redwood Valley, California

ENGINEER

TKJ STRUCTURAL ENGINEERING
9820 Willow Creek Rd., Ste. 455
San Diego, California 92131
858.649.1700 | www.tkjse.com

STAMP

REGISTERED PROFESSIONAL ENGINEER TIMOTHY ... JAQUESS S 4845 EXP. 6-30-19 STRUCTURAL STATE OF CALIFORNIA

REVISIONS	DATE
40% CDs	07/28/17
Progress Set	09/01/17
75% CDs	09/26/17
100% CDs	10/27/17

S100

SHEET NOTES, LEGEND, & ABBREVIATIONS

17065

ALL IDEAS, DESIGNS AND ARRANGEMENTS INDICATED ON THESE DRAWINGS ARE THE PROPERTY OF TKJ STRUCTURAL ENGINEERING, INC., AND ARE INTENDED TO BE USED IN CONNECTION WITH THIS SPECIFIC PROJECT ONLY, AND SHALL NOT BE USED FOR ANY OTHER PURPOSE WHATSOEVER WITHOUT THE WRITTEN CONSENT OF THE ENGINEER.

SHEET NOTES

1. REFERENCE SHEET S100 FOR SHEET NOTES, LEGEND & ABBREVIATIONS.

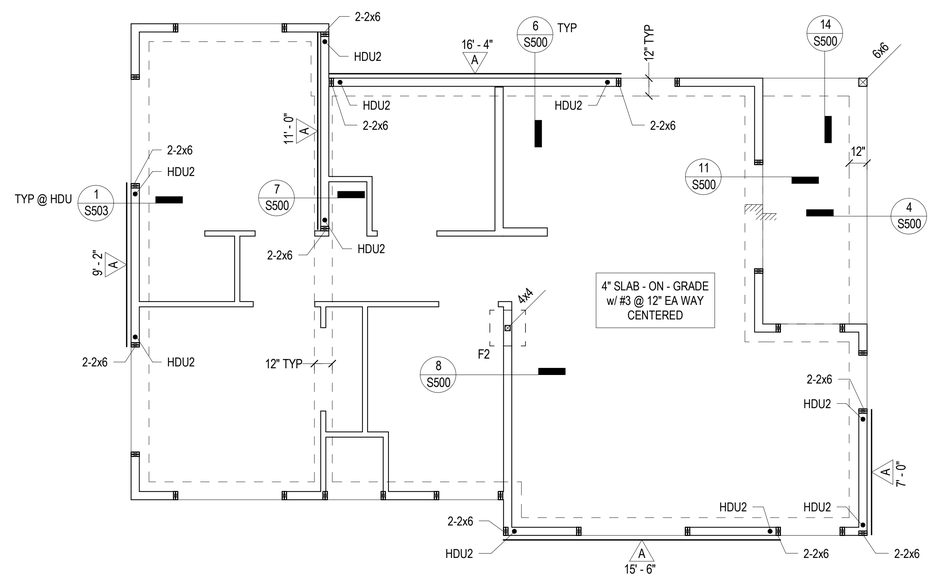

2 BEDROOM FOUNDATION PLAN TYPE A (1)

1/4" = 1'-0"

TRAVOIS
ARCHITECTURE, PC

Coyote Valley Homes I, LIHTC

Redwood Valley, California

ENGINEER

TKJ STRUCTURAL ENGINEERING
9820 Willow Creek Rd., Ste. 455
San Diego, California 92131
858.649.1700 | www.tkjse.com

STAMP

REGISTERED PROFESSIONAL ENGINEER
TIMOTHY K. JADKES
S 4845
EXP. 6-30-19
STRUCTURAL
STATE OF CALIFORNIA

REVISIONS	DATE
40% CDs	07/28/17
Progress Set	09/01/17
75% CDs	09/26/17
100% CDs	10/27/17

S200.1

2 BEDROOM FOUNDATION PLAN TYPE A

17065

ALL IDEAS, DESIGNS AND ARRANGEMENTS INDICATED ON THESE DRAWINGS ARE THE PROPERTY OF TKJ STRUCTURAL ENGINEERING, INC., AND ARE INTENDED TO BE USED IN CONNECTION WITH THIS SPECIFIC PROJECT ONLY, AND SHALL NOT BE USED FOR ANY OTHER PURPOSE WHATSOEVER WITHOUT THE WRITTEN CONSENT OF THE ENGINEER.

SHEET NOTES

1. REFERENCE SHEET S100 FOR SHEET NOTES, LEGEND & ABBREVIATIONS.

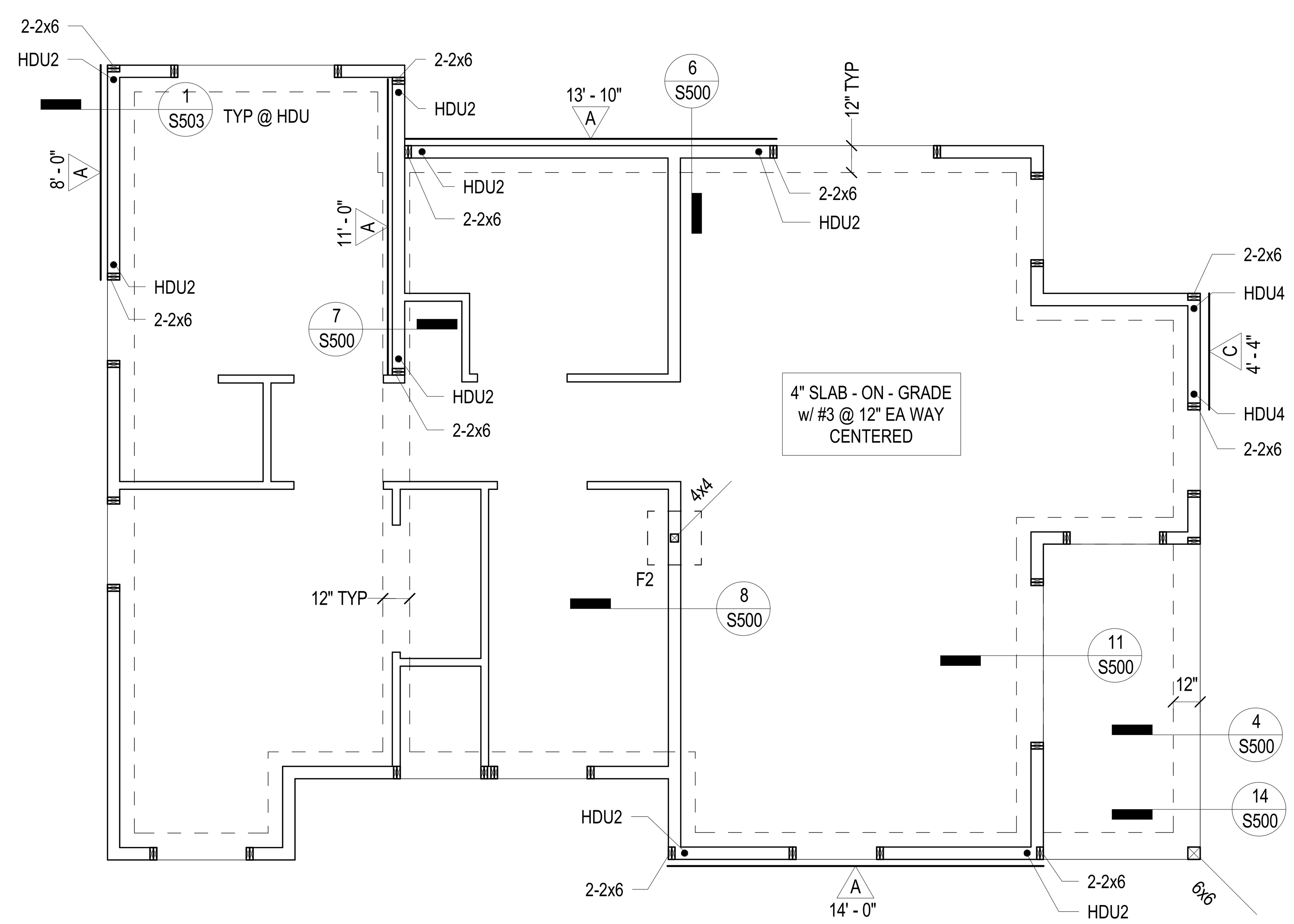

2 BEDROOM FOUNDATION PLAN TYPE B (1)

1/4" = 1'-0"

TRAVOIS
ARCHITECTURE, PC

Coyote Valley Homes I, LIHTC

Redwood Valley, California

ENGINEER

TKJ STRUCTURAL ENGINEERING
9820 Willow Creek Rd., Ste. 455
San Diego, California 92131
858.649.1700 | www.tkjse.com

STAMP

REGISTERED PROFESSIONAL ENGINEER
TIMOTHY ... JAQUESS
S 4845
EXP. 6-30-19
STRUCTURAL
STATE OF CALIFORNIA

REVISIONS	DATE
40% CDs	07/28/17
Progress Set	09/01/17
75% CDs	09/26/17
100% CDs	10/27/17

S200.2

2 BEDROOM FOUNDATION PLAN TYPE B

17065

ALL IDEAS, DESIGNS AND ARRANGEMENTS INDICATED ON THESE DRAWINGS ARE THE PROPERTY OF TKJ STRUCTURAL ENGINEERING, INC., AND ARE INTENDED TO BE USED IN CONNECTION WITH THIS SPECIFIC PROJECT ONLY, AND SHALL NOT BE USED FOR ANY OTHER PURPOSE WHATSOEVER WITHOUT THE WRITTEN CONSENT OF THE ENGINEER.

SHEET NOTES

1. REFERENCE SHEET S100 FOR SHEET NOTES, LEGEND & ABBREVIATIONS.

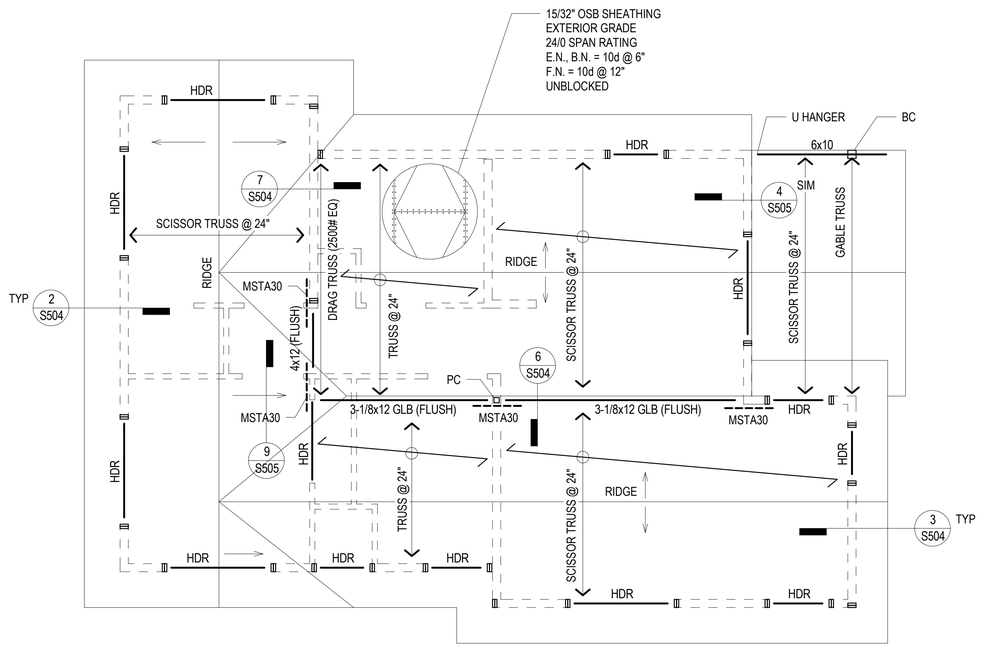

2 BEDROOM ROOF FRAMING PLAN TYPE A (1)

1/4" = 1'-0"

TRAVOIS
ARCHITECTURE, PC

Coyote Valley Homes I, LIHTC

Redwood Valley, California

ENGINEER

TKJ STRUCTURAL ENGINEERING
9820 Willow Creek Rd., Ste. 455
San Diego, California 92131
858.649.1700 | www.tkjse.com

STAMP

REVISIONS	DATE
40% CDs	07/28/17
Progress Set	09/01/17
75% CDs	09/26/17
100% CDs	10/27/17

S202.1

2 BEDROOM ROOF FRAMING PLAN TYPE A

17065

ALL IDEAS, DESIGNS AND ARRANGEMENTS INDICATED ON THESE DRAWINGS ARE THE PROPERTY OF TKJ STRUCTURAL ENGINEERING, INC., AND ARE INTENDED TO BE USED IN CONNECTION WITH THIS SPECIFIC PROJECT ONLY, AND SHALL NOT BE USED FOR ANY OTHER PURPOSE WHATSOEVER WITHOUT THE WRITTEN CONSENT OF THE ENGINEER.

SHEET NOTES

1. REFERENCE SHEET S100 FOR SHEET NOTES, LEGEND & ABBREVIATIONS.

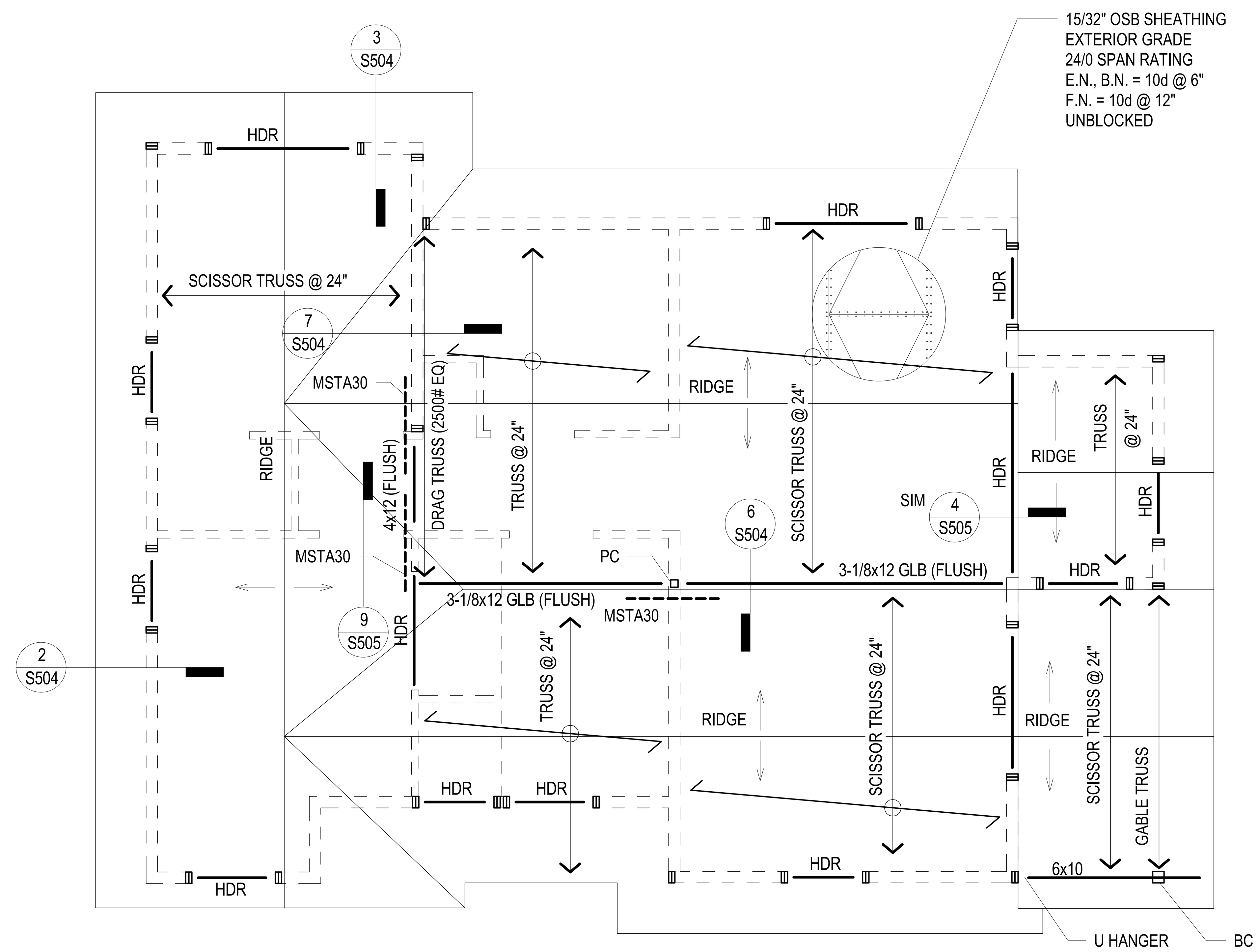

2 BEDROOM ROOF FRAMING PLAN PLAN TYPE B

1/4" = 1'-0"

1

TRAVOIS
ARCHITECTURE, PC

Coyote Valley Homes I, LIHTC

Redwood Valley, California

ENGINEER

TKJ STRUCTURAL ENGINEERING
9820 Willow Creek Rd., Ste. 455
San Diego, California 92131
858.649.1700 | www.tkjse.com

STAMP

REVISIONS	DATE
40% CDs	07/28/17
Progress Set	09/01/17
75% CDs	09/26/17
100% CDs	10/27/17

S202.2

2 BEDROOM ROOF FRAMING PLAN TYPE B

17065

ALL IDEAS, DESIGNS AND ARRANGEMENTS INDICATED ON THESE DRAWINGS ARE THE PROPERTY OF TKJ STRUCTURAL ENGINEERING, INC., AND ARE INTENDED TO BE USED IN CONNECTION WITH THIS SPECIFIC PROJECT ONLY, AND SHALL NOT BE USED FOR ANY OTHER PURPOSE WHATSOEVER WITHOUT THE WRITTEN CONSENT OF THE ENGINEER

SHEET NOTES

1. REFERENCE SHEET S100 FOR SHEET NOTES, LEGEND & ABBREVIATIONS.

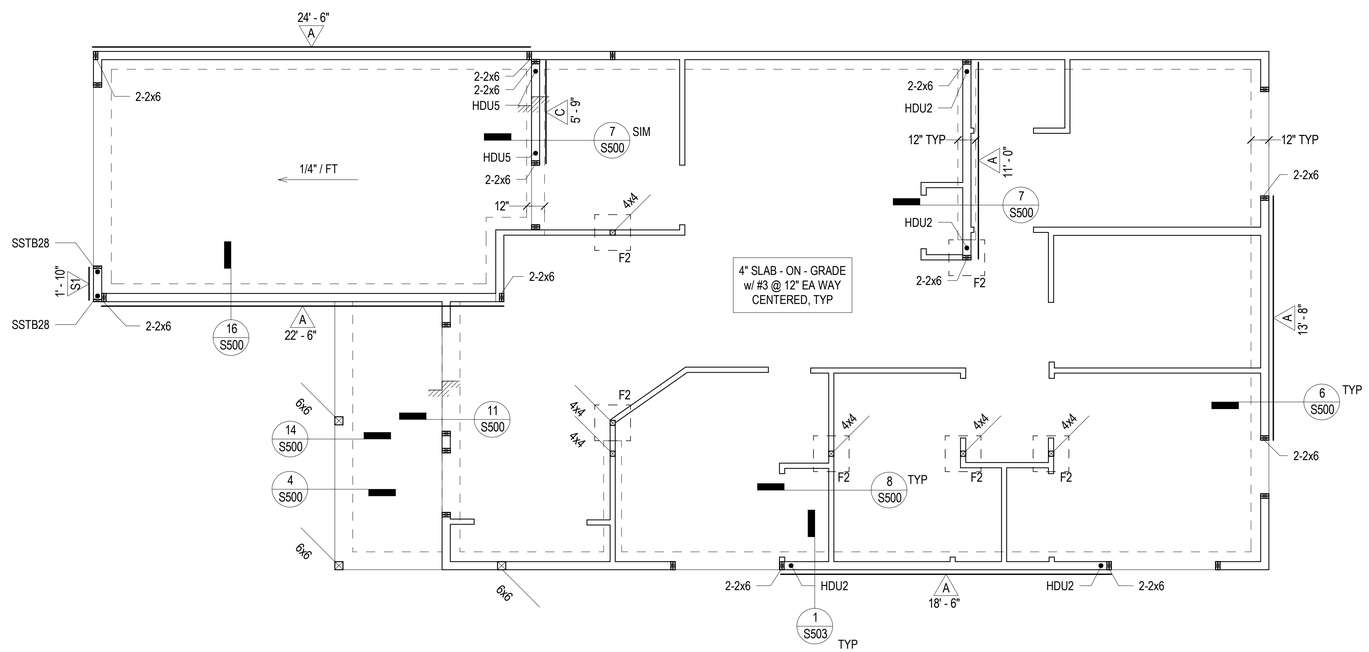

3 BEDROOM FOUNDATION PLAN TYPE A (1)

1/4" = 1'-0"

TRAVOIS
ARCHITECTURE, PC

Coyote Valley Homes I, LIHTC

Redwood Valley, California

ENGINEER

TKJ STRUCTURAL ENGINEERING
9820 Willow Creek Rd., Ste. 455
San Diego, California 92131
858.649.1700 | www.tkjse.com

STAMP

REGISTERED PROFESSIONAL ENGINEER
TIMOTHY K. JACKSES
S 4845
EXP. 6-30-19
STRUCTURAL
STATE OF CALIFORNIA

REVISIONS	DATE
40% CDs	07/28/17
Progress Set	09/01/17
75% CDs	09/26/17
100% CDs	10/27/17

S300.1a

3 BEDROOM FOUNDATION PLAN TYPE A

17065

ALL IDEAS, DESIGNS AND ARRANGEMENTS INDICATED ON THESE DRAWINGS ARE THE PROPERTY OF TKJ STRUCTURAL ENGINEERING, INC., AND ARE INTENDED TO BE USED IN CONNECTION WITH THIS SPECIFIC PROJECT ONLY, AND SHALL NOT BE USED FOR ANY OTHER PURPOSE WHATSOEVER WITHOUT THE WRITTEN CONSENT OF THE ENGINEER.

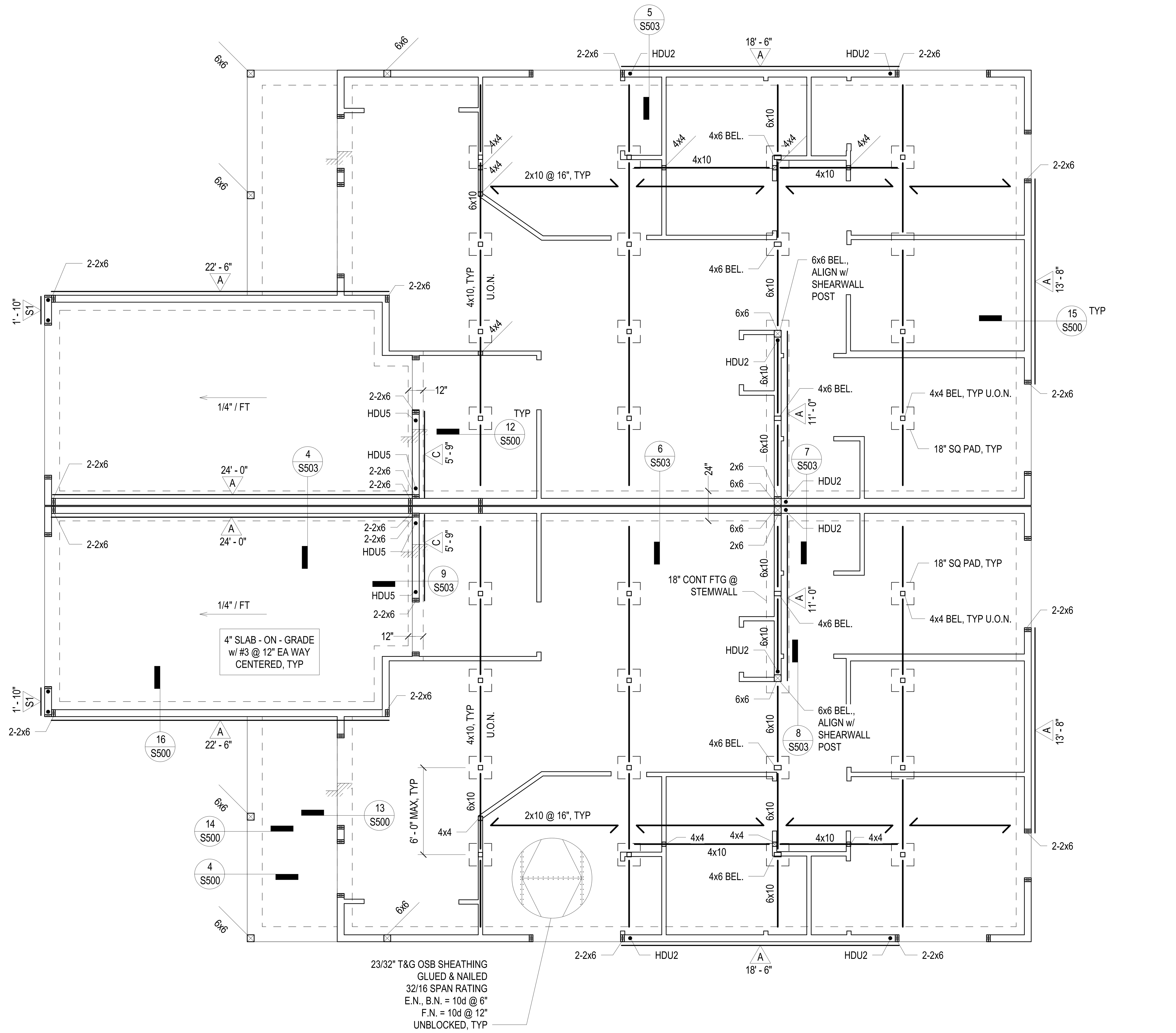

3 BEDROOM DUPLEX FOUNDATION PLAN TYPE A (1)

1/4" = 1'-0"

TRAVOIS
ARCHITECTURE, PC

Coyote Valley Homes I, LIHTC

Redwood Valley, California

ENGINEER

TKJ STRUCTURAL ENGINEERING
9820 Willow Creek Rd., Ste. 455
San Diego, California 92131
858.649.1700 | www.tkjse.com

STAMP

REVISIONS	DATE
40% CDs	07/28/17
Progress Set	09/01/17
75% CDs	09/26/17
100% CDs	10/27/17

S300.1b

3 BEDROOM DUPLEX FOUNDATION PLAN TYPE A

17065

ALL IDEAS, DESIGNS AND ARRANGEMENTS INDICATED ON THESE DRAWINGS ARE THE PROPERTY OF TKJ STRUCTURAL ENGINEERING, INC., AND ARE INTENDED TO BE USED IN CONNECTION WITH THIS SPECIFIC PROJECT ONLY, AND SHALL NOT BE USED FOR ANY OTHER PURPOSE WHATSOEVER WITHOUT THE WRITTEN CONSENT OF THE ENGINEER

SHEET NOTES

1. REFERENCE SHEET S100 FOR SHEET NOTES, LEGEND & ABBREVIATIONS.

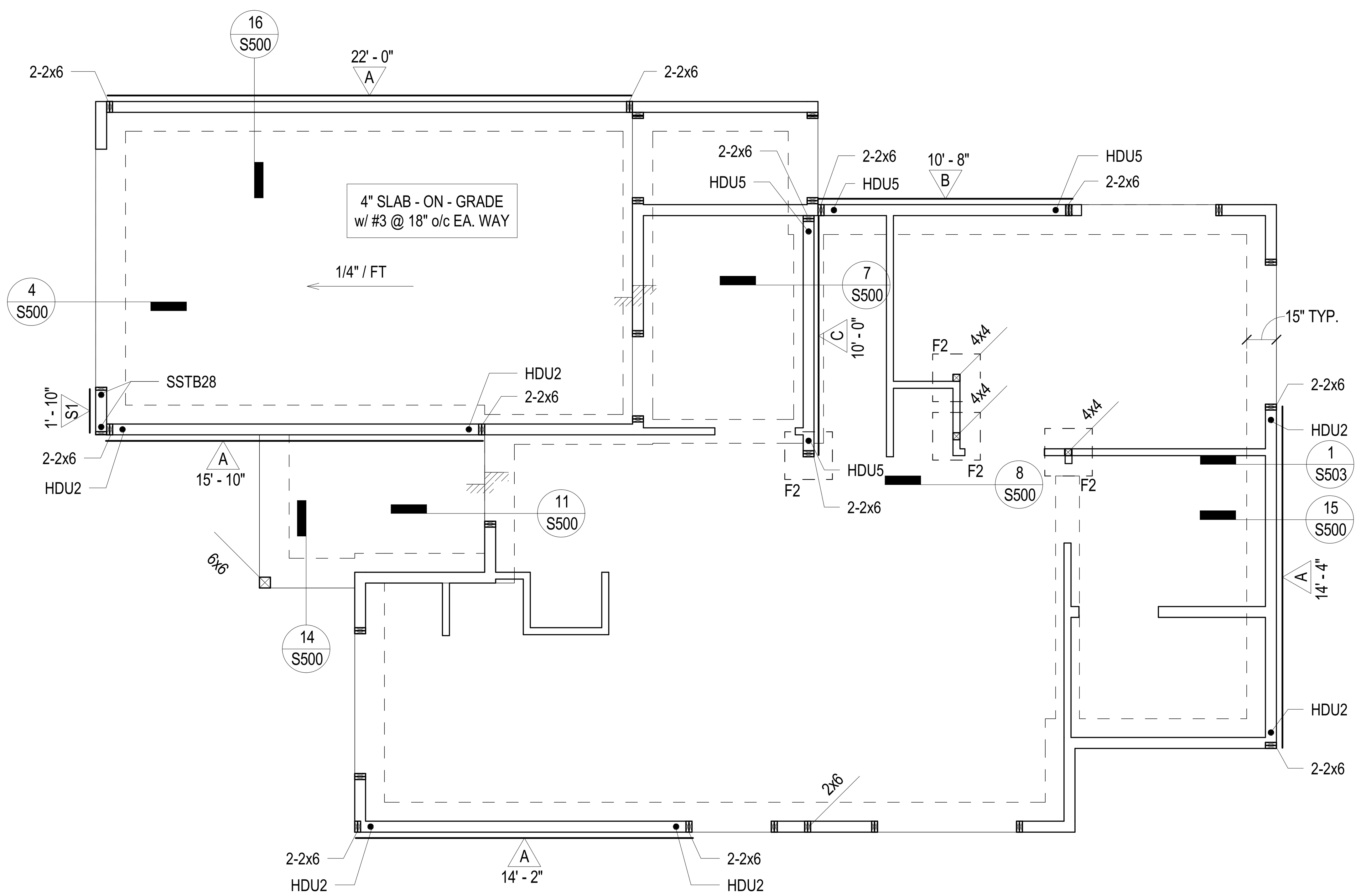

3 BEDROOM FOUNDATION PLAN TYPE B (1)
1/4" = 1'-0"

TRAVOIS
ARCHITECTURE, PC

Coyote Valley Homes I, LIHTC

Redwood Valley, California

ENGINEER

TKJ STRUCTURAL ENGINEERING
9820 Willow Creek Rd., Ste. 455
San Diego, California 92131
858.649.1700 | www.tkjse.com

STAMP

REGISTERED PROFESSIONAL ENGINEER
TIMOTHY JAQUESS
S 4845
EXP. 6-30-19
STRUCTURAL
STATE OF CALIFORNIA

REVISIONS	DATE
40% CDs	07/28/17
Progress Set	09/01/17
75% CDs	09/26/17
100% CDs	10/27/17

S300.2a

3 BEDROOM FOUNDATION PLAN TYPE B

17065

ALL IDEAS, DESIGNS AND ARRANGEMENTS INDICATED ON THESE DRAWINGS ARE THE PROPERTY OF TKJ STRUCTURAL ENGINEERING, INC., AND ARE INTENDED TO BE USED IN CONNECTION WITH THIS SPECIFIC PROJECT ONLY, AND SHALL NOT BE USED FOR ANY OTHER PURPOSE WHATSOEVER WITHOUT THE WRITTEN CONSENT OF THE ENGINEER.

SHEET NOTES

1. REFERENCE SHEET S100 FOR SHEET NOTES, LEGEND & ABBREVIATIONS.
2. FOR 3 BEDROOM TYPE B DUPLEX AT SLAB-ON-GRADE FOUNDATION, REFERENCE SHEET S300.2a.

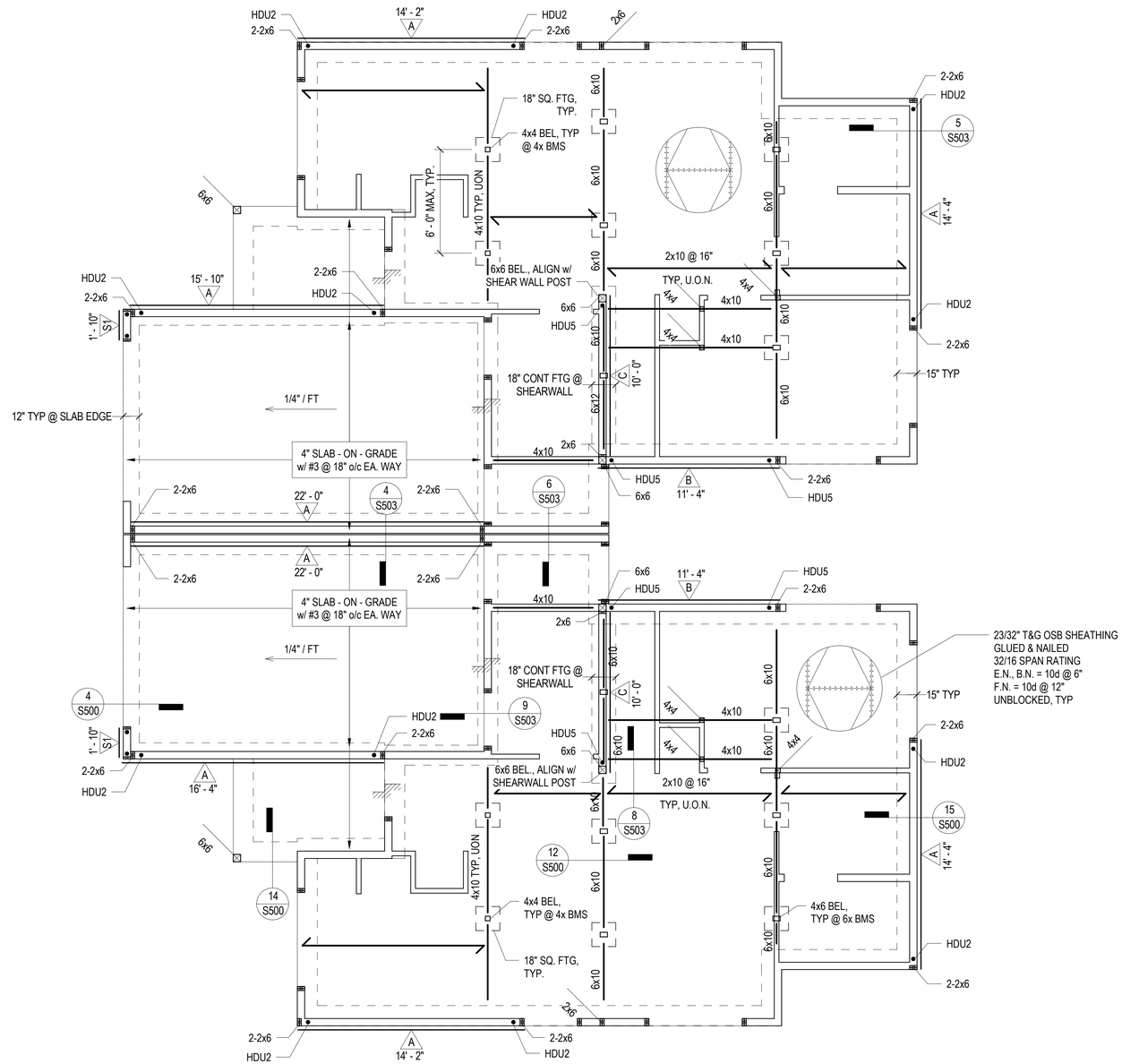

3 BEDROOM DUPLEX FOUNDATION PLAN TYPE B (1)

1/4" = 1'-0"

TRAVOIS
ARCHITECTURE, PC

Coyote Valley Homes I, LIHTC

Redwood Valley, California

ENGINEER

TKJ STRUCTURAL ENGINEERING
9820 Willow Creek Rd., Ste. 455
San Diego, California 92131
858.649.1700 | www.tkjse.com

STAMP

REGISTERED PROFESSIONAL ENGINEER
TIMOTHY K. JACKESS
S 4845
EXP. 6-30-19
STRUCTURAL
STATE OF CALIFORNIA

REVISIONS	DATE
40% CDs	07/28/17
Progress Set	09/01/17
75% CDs	09/26/17
100% CDs	10/27/17

S300.2b

3 BEDROOM DUPLEX FOUNDATION PLAN TYPE B

17065

ALL IDEAS, DESIGNS AND ARRANGEMENTS INDICATED ON THESE DRAWINGS ARE THE PROPERTY OF TKJ STRUCTURAL ENGINEERING, INC., AND ARE INTENDED TO BE USED IN CONNECTION WITH THIS SPECIFIC PROJECT ONLY, AND SHALL NOT BE USED FOR ANY OTHER PURPOSE WHATSOEVER WITHOUT THE WRITTEN CONSENT OF THE ENGINEER.

SHEET NOTES

1. REFERENCE SHEET S100 FOR SHEET NOTES, LEGEND & ABBREVIATIONS.

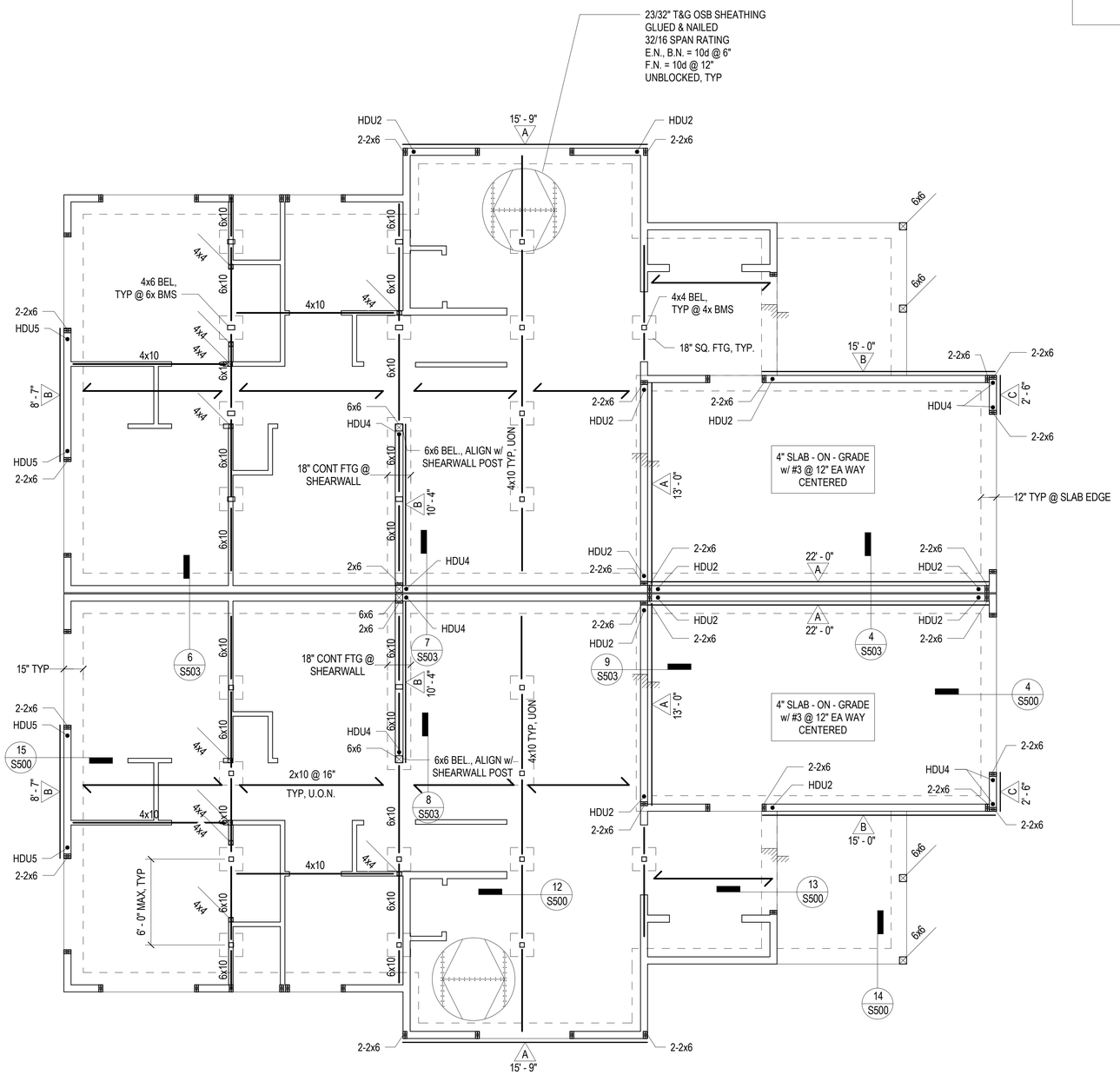

3 BEDROOM FOUNDATION PLAN TYPE C (1)

1/4" = 1'-0"

TRAVOIS
ARCHITECTURE, PC

Coyote Valley Homes I, LIHTC

Redwood Valley, California

ENGINEER

STRUCTURAL ENGINEERING
9820 Willow Creek Rd., Ste. 455
San Diego, California 92131
858.649.1700 | www.tkjse.com

STAMP

REGISTERED PROFESSIONAL ENGINEER
TIMOTHY K. JAQUESS
S 4845
EXP. 6-30-19
STRUCTURAL
STATE OF CALIFORNIA

REVISIONS	DATE
40% CDs	07/28/17
Progress Set	09/01/17
75% CDs	09/26/17
100% CDs	10/27/17

S300.3

3 BEDROOM FOUNDATION PLAN TYPE C

17065

ALL IDEAS, DESIGNS AND ARRANGEMENTS INDICATED ON THESE DRAWINGS ARE THE PROPERTY OF TKJ STRUCTURAL ENGINEERING, INC., AND ARE INTENDED TO BE USED IN CONNECTION WITH THIS SPECIFIC PROJECT ONLY, AND SHALL NOT BE USED FOR ANY OTHER PURPOSE WHATSOEVER WITHOUT THE WRITTEN CONSENT OF THE ENGINEER.

SHEET NOTES

1. REFERENCE SHEET S100 FOR SHEET NOTES, LEGEND & ABBREVIATIONS.

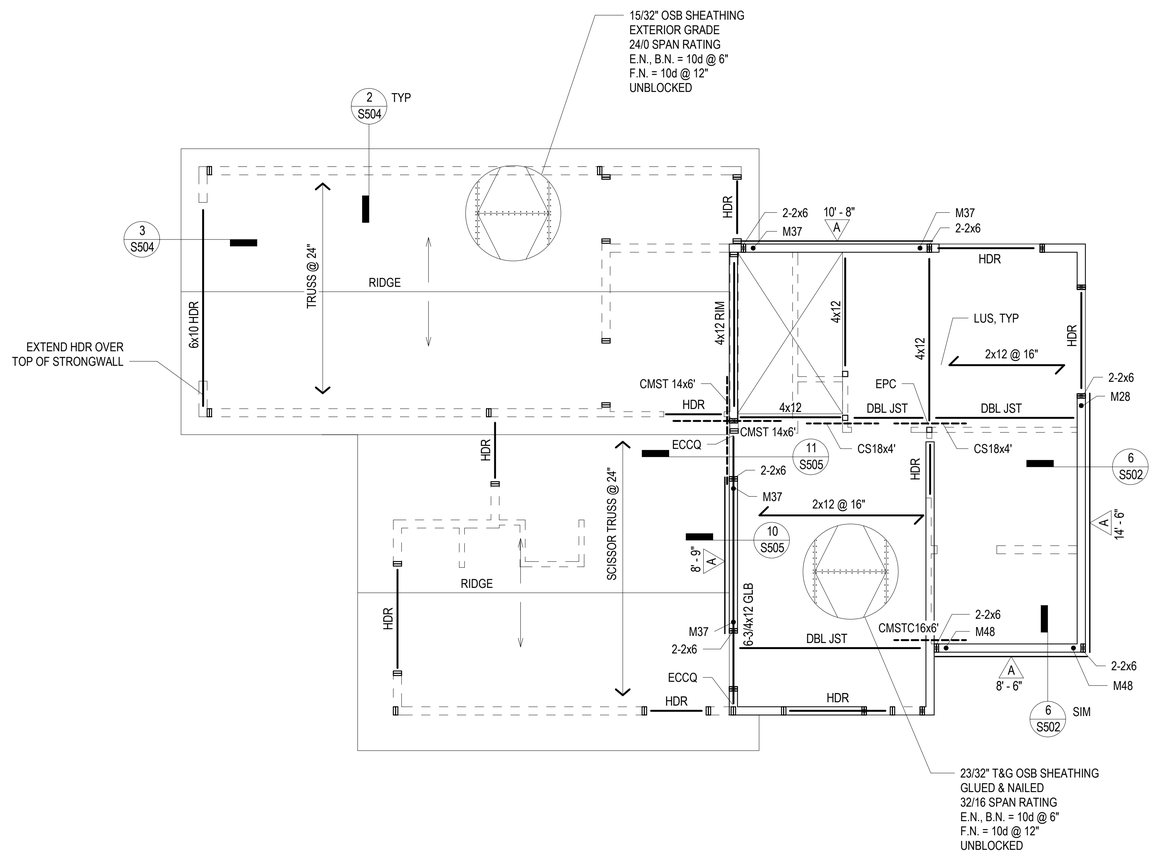

3 BEDROOM LEVEL 2 FRAMING PLAN TYPE B (1)

1/4" = 1'-0"

TRAVOIS
ARCHITECTURE, PC

Coyote Valley Homes I, LIHTC

Redwood Valley, California

ENGINEER

TKJ STRUCTURAL ENGINEERING
9820 Willow Creek Rd., Ste. 455
San Diego, California 92131
858.649.1700 | www.tkjse.com

STAMP

REGISTERED PROFESSIONAL ENGINEER
TIMOTHY K. JACUESS
S 4845
EXP. 6-30-19
STRUCTURAL
STATE OF CALIFORNIA

REVISIONS	DATE
40% CDs	07/28/17
Progress Set	09/01/17
75% CDs	09/26/17
100% CDs	10/27/17

S301.2a

3 BEDROOM LEVEL 2
FRAMING PLAN TYPE B

17065

ALL IDEAS, DESIGNS AND ARRANGEMENTS INDICATED ON THESE DRAWINGS ARE THE PROPERTY OF TKJ STRUCTURAL ENGINEERING, INC., AND ARE INTENDED TO BE USED IN CONNECTION WITH THIS SPECIFIC PROJECT ONLY, AND SHALL NOT BE USED FOR ANY OTHER PURPOSE WHATSOEVER WITHOUT THE WRITTEN CONSENT OF THE ENGINEER.

SHEET NOTES

1. REFERENCE SHEET S100 FOR SHEET NOTES, LEGEND & ABBREVIATIONS.

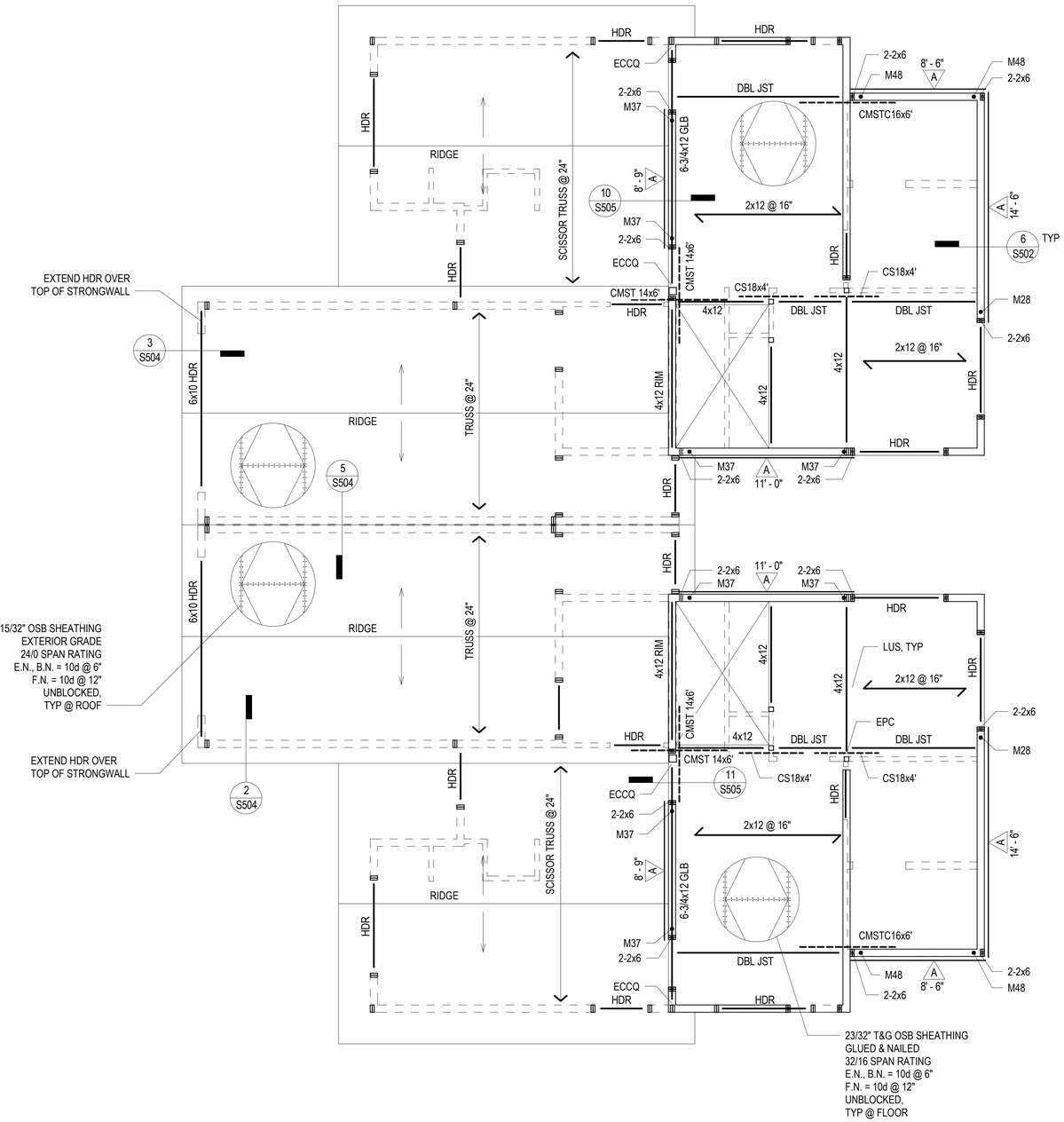

3 BEDROOM DUPLEX LEVEL 2 FRAMING PLAN TYPE B (1)

1/4" = 1'-0"

ALL IDEAS, DESIGNS AND ARRANGEMENTS INDICATED ON THESE DRAWINGS ARE THE PROPERTY OF TKJ STRUCTURAL ENGINEERING, INC., AND ARE INTENDED TO BE USED IN CONNECTION WITH THIS SPECIFIC PROJECT ONLY, AND SHALL NOT BE USED FOR ANY OTHER PURPOSE WHATSOEVER WITHOUT THE WRITTEN CONSENT OF THE ENGINEER.

TRAVOIS
ARCHITECTURE, PC

Coyote Valley Homes I, LIHTC

Redwood Valley, California

ENGINEER

TKJ STRUCTURAL ENGINEERING
9820 Willow Creek Rd., Ste. 455
San Diego, California 92131
858.649.1700 | www.tkjse.com

STAMP

REGISTERED PROFESSIONAL ENGINEER
TIMOTHY K. JACKSS
S 4845
EXP. 6-30-19
STRUCTURAL
STATE OF CALIFORNIA

REVISIONS	DATE
40% CDs	07/28/17
Progress Set	09/01/17
75% CDs	09/26/17
100% CDs	10/27/17

S301.2b

3 BEDROOM DUPLEX LEVEL 2
FRAMING PLAN TYPE B

17065

SHEET NOTES

1. REFERENCE SHEET S100 FOR SHEET NOTES, LEGEND & ABBREVIATIONS.

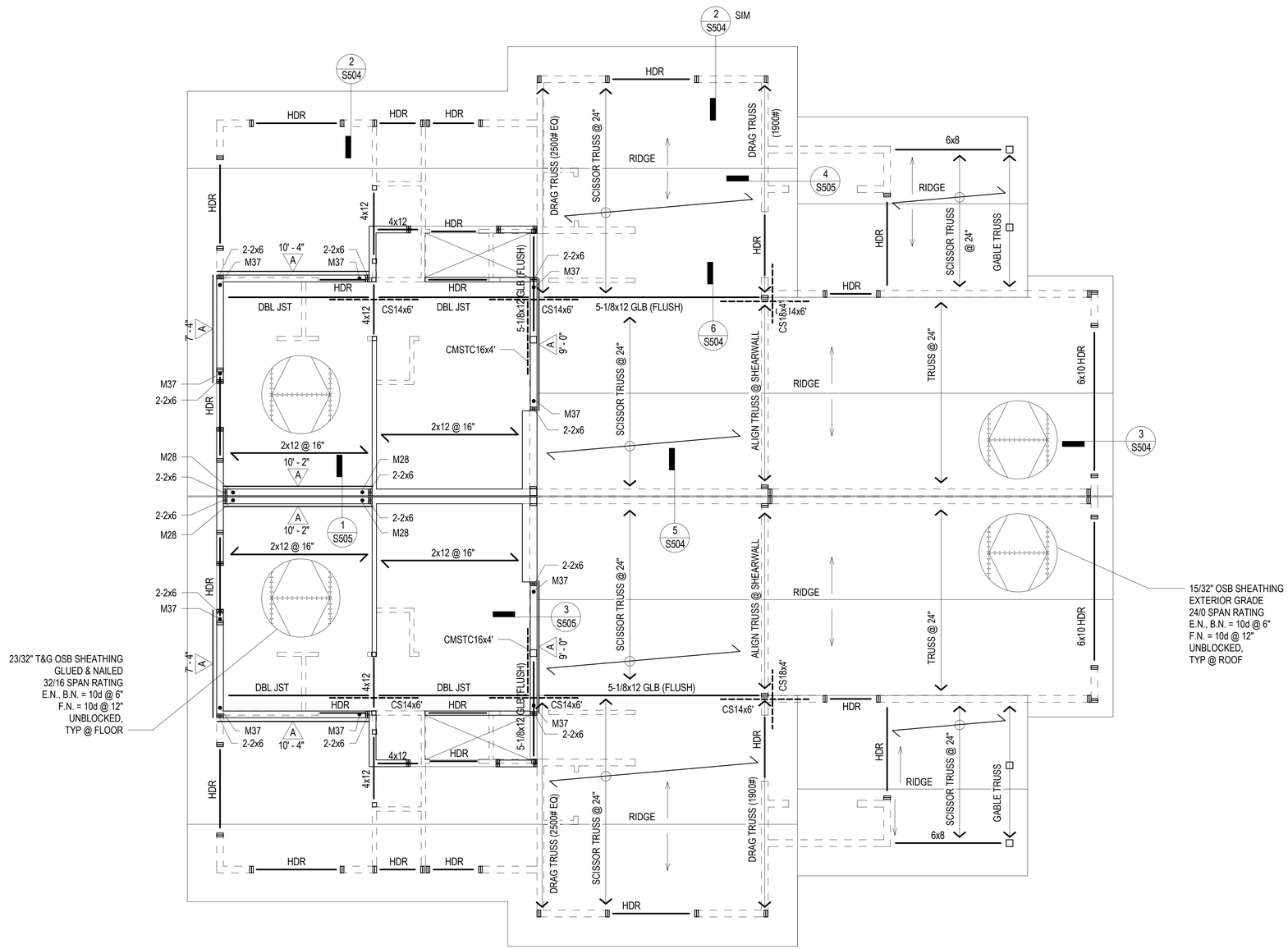

3 BEDROOM LEVEL 2 FRAMING PLAN TYPE C (1)

1/4" = 1'-0"

TRAVOIS
ARCHITECTURE, PC

Coyote Valley Homes I, LIHTC

Redwood Valley, California

ENGINEER

TKJ STRUCTURAL ENGINEERING
9820 Willow Creek Rd., Ste. 455
San Diego, California 92131
858.649.1700 | www.tkjse.com

STAMP

REGISTERED PROFESSIONAL ENGINEER
TIMOTHY K. JACUESS
S 4845
EXP. 6-30-19
STRUCTURAL
STATE OF CALIFORNIA

REVISIONS	DATE
40% CDs	07/28/17
Progress Set	09/01/17
75% CDs	09/26/17
100% CDs	10/27/17

S301.3

3 BEDROOM LEVEL 2 FRAMING PLAN TYPE C

17065

ALL IDEAS, DESIGNS AND ARRANGEMENTS INDICATED ON THESE DRAWINGS ARE THE PROPERTY OF TKJ STRUCTURAL ENGINEERING, INC., AND ARE INTENDED TO BE USED IN CONNECTION WITH THIS SPECIFIC PROJECT ONLY, AND SHALL NOT BE USED FOR ANY OTHER PURPOSE WHATSOEVER WITHOUT THE WRITTEN CONSENT OF THE ENGINEER.

SHEET NOTES

1. REFERENCE SHEET S100 FOR SHEET NOTES, LEGEND & ABBREVIATIONS.

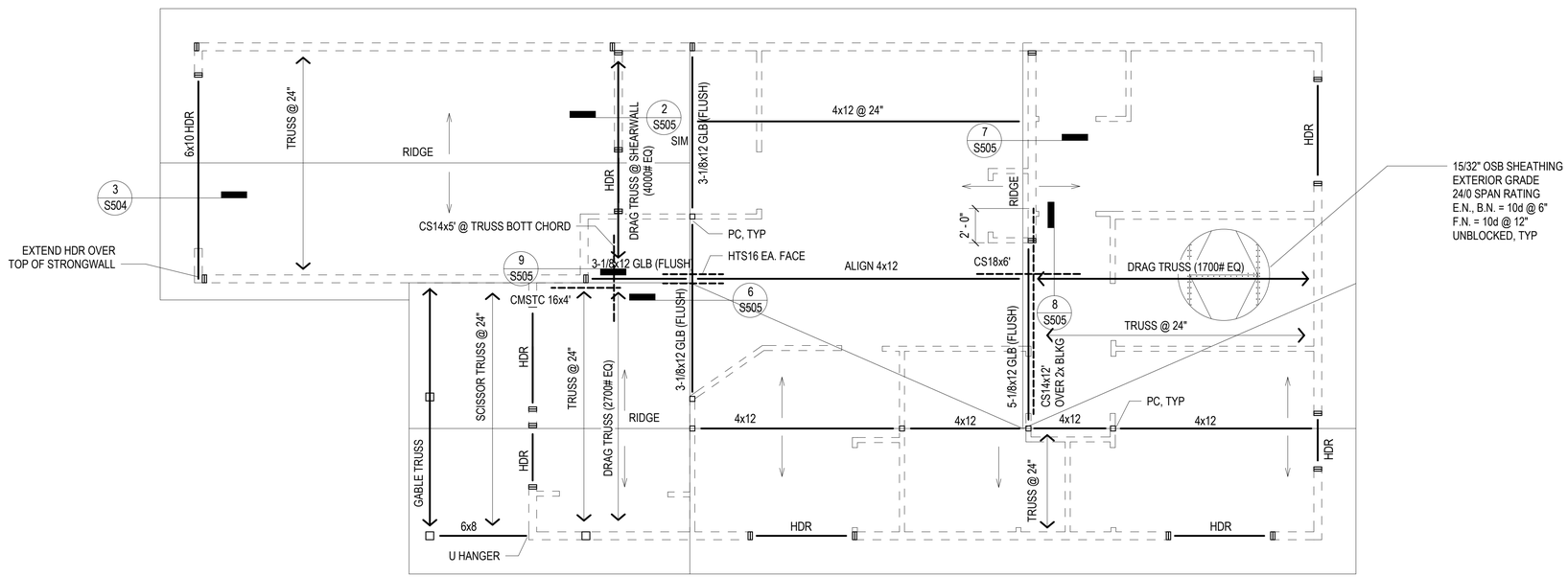

3 BEDROOM ROOF FRAMING PLAN TYPE A (1)

1/4" = 1'-0"

TRAVOIS
ARCHITECTURE, PC

Coyote Valley Homes I, LIHTC

Redwood Valley, California

ENGINEER

TKJ STRUCTURAL ENGINEERING
9820 Willow Creek Rd., Ste. 455
San Diego, California 92131
858.649.1700 | www.tkjse.com

STAMP

REGISTERED PROFESSIONAL ENGINEER
TIMOTHY K. JACKSES
S 4845
EXP. 6-30-19
STRUCTURAL
STATE OF CALIFORNIA

REVISIONS	DATE
40% CDs	07/28/17
Progress Set	09/01/17
75% CDs	09/26/17
100% CDs	10/27/17

S302.1a

3 BEDROOM ROOF FRAMING PLAN TYPE A

17065

ALL IDEAS, DESIGNS AND ARRANGEMENTS INDICATED ON THESE DRAWINGS ARE THE PROPERTY OF TKJ STRUCTURAL ENGINEERING, INC., AND ARE INTENDED TO BE USED IN CONNECTION WITH THIS SPECIFIC PROJECT ONLY, AND SHALL NOT BE USED FOR ANY OTHER PURPOSE WHATSOEVER WITHOUT THE WRITTEN CONSENT OF THE ENGINEER.

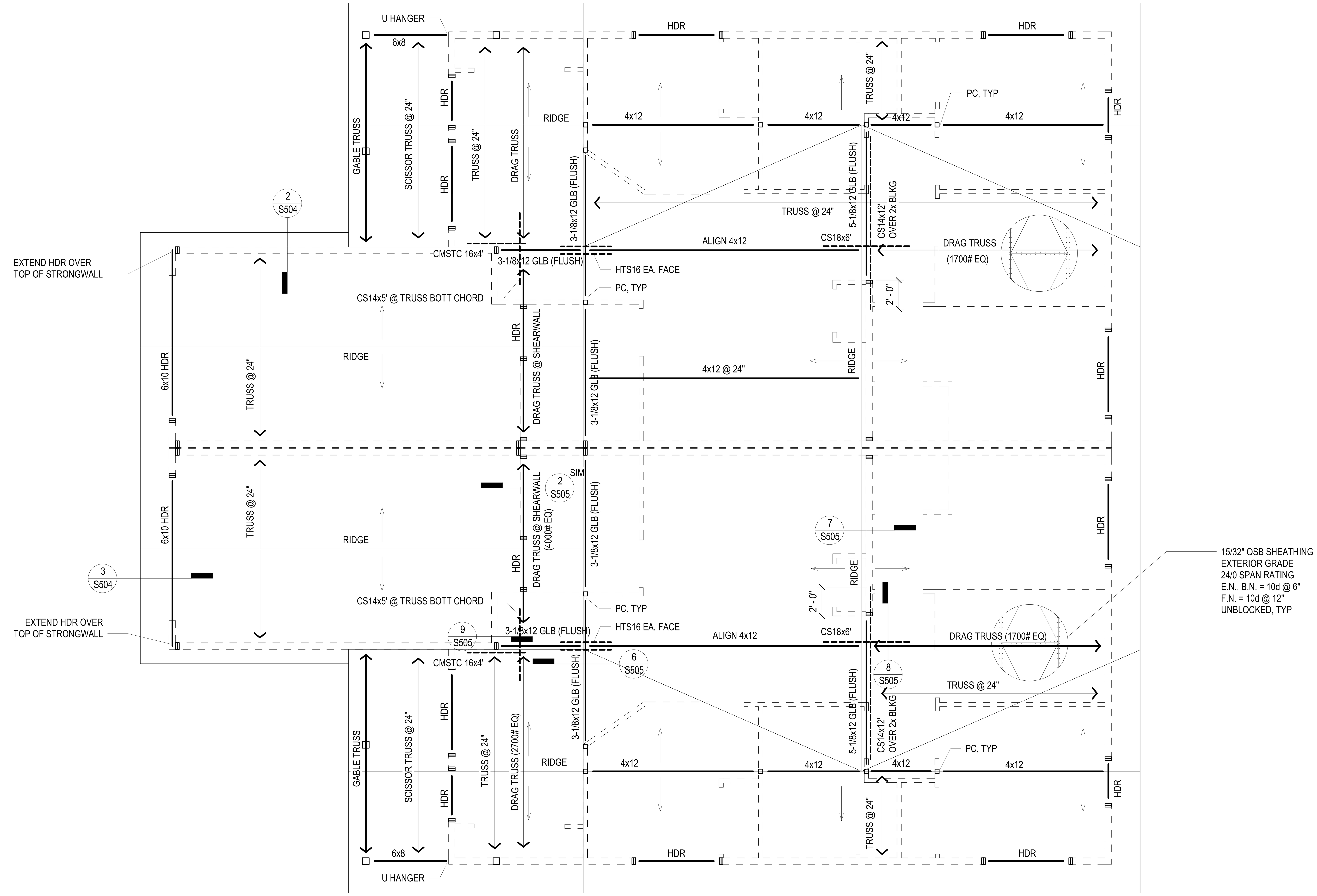

3 BEDROOM DUPLEX ROOF FRAMING PLAN TYPE A (1)

1/4" = 1'-0"

TRAVOIS
ARCHITECTURE, PC

Coyote Valley Homes I, LIHTC

Redwood Valley, California

ENGINEER

TKJ STRUCTURAL ENGINEERING
9820 Willow Creek Rd., Ste. 455
San Diego, California 92131
858.649.1700 | www.tkjse.com

STAMP

REVISIONS	DATE
40% CDs	07/28/17
Progress Set	09/01/17
75% CDs	09/26/17
100% CDs	10/27/17

S302.1b

3 BEDROOM DUPLEX ROOF FRAMING PLAN TYPE A

17065

ALL IDEAS, DESIGNS AND ARRANGEMENTS INDICATED ON THESE DRAWINGS ARE THE PROPERTY OF TKJ STRUCTURAL ENGINEERING, INC., AND ARE INTENDED TO BE USED IN CONNECTION WITH THIS SPECIFIC PROJECT ONLY, AND SHALL NOT BE USED FOR ANY OTHER PURPOSE WHATSOEVER WITHOUT THE WRITTEN CONSENT OF THE ENGINEER

SHEET NOTES

1. REFERENCE SHEET S100 FOR SHEET NOTES, LEGEND & ABBREVIATIONS.

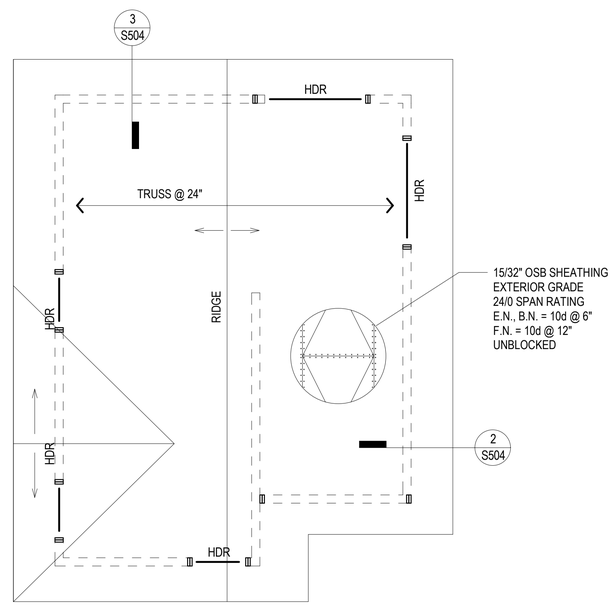

3 BEDROOM ROOF FRAMING PLAN TYPE B (1)

1/4" = 1'-0"

ALL IDEAS, DESIGNS AND ARRANGEMENTS INDICATED ON THESE DRAWINGS ARE THE PROPERTY OF TKJ STRUCTURAL ENGINEERING, INC., AND ARE INTENDED TO BE USED IN CONNECTION WITH THIS SPECIFIC PROJECT ONLY, AND SHALL NOT BE USED FOR ANY OTHER PURPOSE WHATSOEVER WITHOUT THE WRITTEN CONSENT OF THE ENGINEER.

TRAVOIS
ARCHITECTURE, PC

Coyote Valley Homes I, LIHTC

Redwood Valley, California

ENGINEER

TKJ STRUCTURAL ENGINEERING
9820 Willow Creek Rd., Ste. 455
San Diego, California 92131
858.649.1700 | www.tkjse.com

STAMP

REGISTERED PROFESSIONAL ENGINEER
TIMOTHY K. JACUESS
S 4845
EXP. 6-30-19
STRUCTURAL
STATE OF CALIFORNIA

REVISIONS	DATE
40% CDs	07/28/17
Progress Set	09/01/17
75% CDs	09/26/17
100% CDs	10/27/17

S302.2a

3 BEDROOM ROOF FRAMING PLAN TYPE B

17065

SHEET NOTES

1. REFERENCE SHEET S100 FOR SHEET NOTES, LEGEND & ABBREVIATIONS.

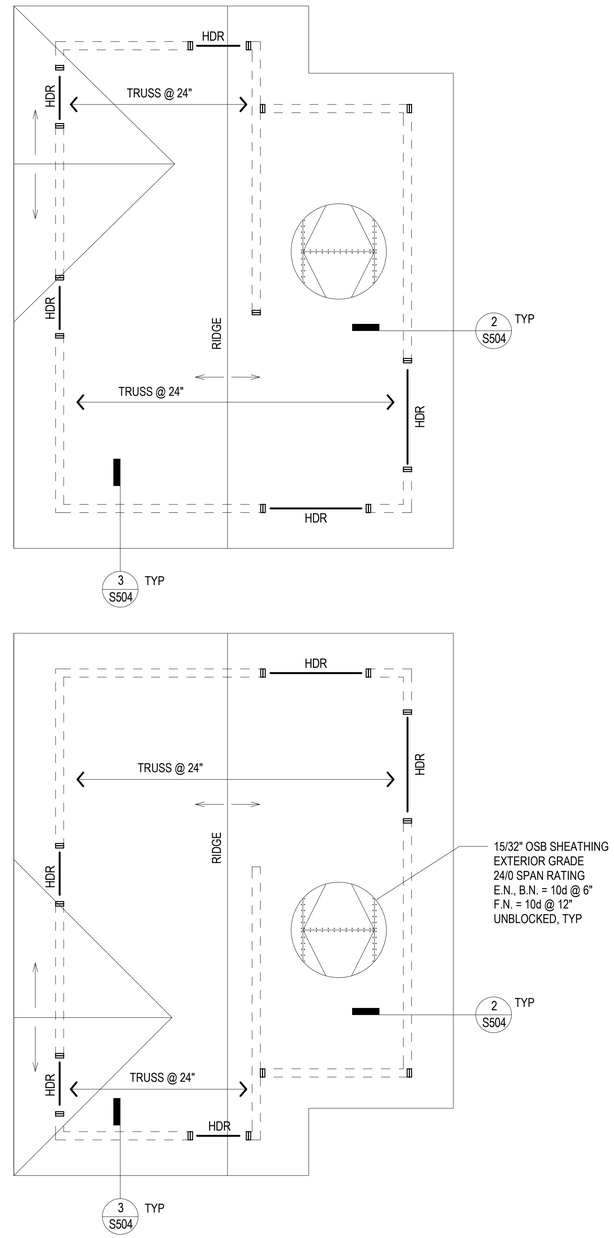

3 BEDROOM DUPLEX ROOF FRAMING PLAN TYPE B (1)

1/4" = 1'-0"

TRAVOIS
ARCHITECTURE, PC

Coyote Valley Homes I, LIHTC

Redwood Valley, California

ENGINEER

TKJ STRUCTURAL ENGINEERING
9820 Willow Creek Rd., Ste. 455
San Diego, California 92131
858.649.1700 | www.tkjse.com

STAMP

REGISTERED PROFESSIONAL ENGINEER
TIMOTHY K. JACKSS
S 4845
EXP. 6-30-19
STRUCTURAL
STATE OF CALIFORNIA

REVISIONS	DATE
40% CDs	07/28/17
Progress Set	09/01/17
75% CDs	09/26/17
100% CDs	10/27/17

S302.2b

3 BEDROOM DUPLEX ROOF FRAMING PLAN TYPE B

17065

ALL IDEAS, DESIGNS AND ARRANGEMENTS INDICATED ON THESE DRAWINGS ARE THE PROPERTY OF TKJ STRUCTURAL ENGINEERING, INC., AND ARE INTENDED TO BE USED IN CONNECTION WITH THIS SPECIFIC PROJECT ONLY, AND SHALL NOT BE USED FOR ANY OTHER PURPOSE WHATSOEVER WITHOUT THE WRITTEN CONSENT OF THE ENGINEER.

SHEET NOTES

1. REFERENCE SHEET S100 FOR SHEET NOTES, LEGEND & ABBREVIATIONS.

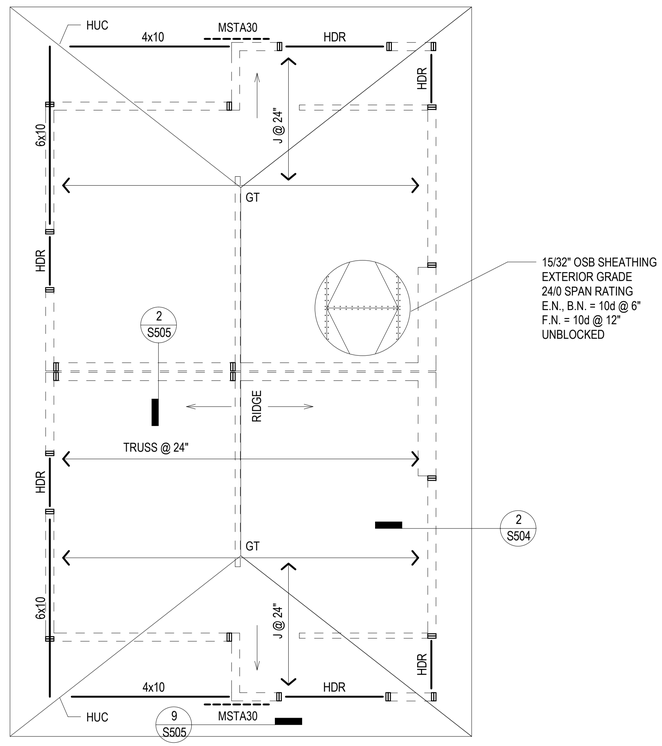

3 BEDROOM ROOF FRAMING PLAN TYPE C (1)
1/4" = 1'-0"

TRAVOIS
ARCHITECTURE, PC

Coyote Valley Homes I, LIHTC

Redwood Valley, California

ENGINEER

TKJ STRUCTURAL ENGINEERING
9820 Willow Creek Rd., Ste. 455
San Diego, California 92131
858.649.1700 | www.tkjse.com

STAMP

REGISTERED PROFESSIONAL ENGINEER
TIMOTHY K. JACUESS
S 4845
EXP. 6-30-19
STRUCTURAL
STATE OF CALIFORNIA

REVISIONS	DATE
40% CDs	07/28/17
Progress Set	09/01/17
75% CDs	09/26/17
100% CDs	10/27/17

S302.3

3 BEDROOM ROOF FRAMING PLAN TYPE C

17065

ALL IDEAS, DESIGNS AND ARRANGEMENTS INDICATED ON THESE DRAWINGS ARE THE PROPERTY OF TKJ STRUCTURAL ENGINEERING, INC., AND ARE INTENDED TO BE USED IN CONNECTION WITH THIS SPECIFIC PROJECT ONLY, AND SHALL NOT BE USED FOR ANY OTHER PURPOSE WHATSOEVER WITHOUT THE WRITTEN CONSENT OF THE ENGINEER.

SHEET NOTES

1. REFERENCE SHEET S100 FOR SHEET NOTES, LEGEND & ABBREVIATIONS.

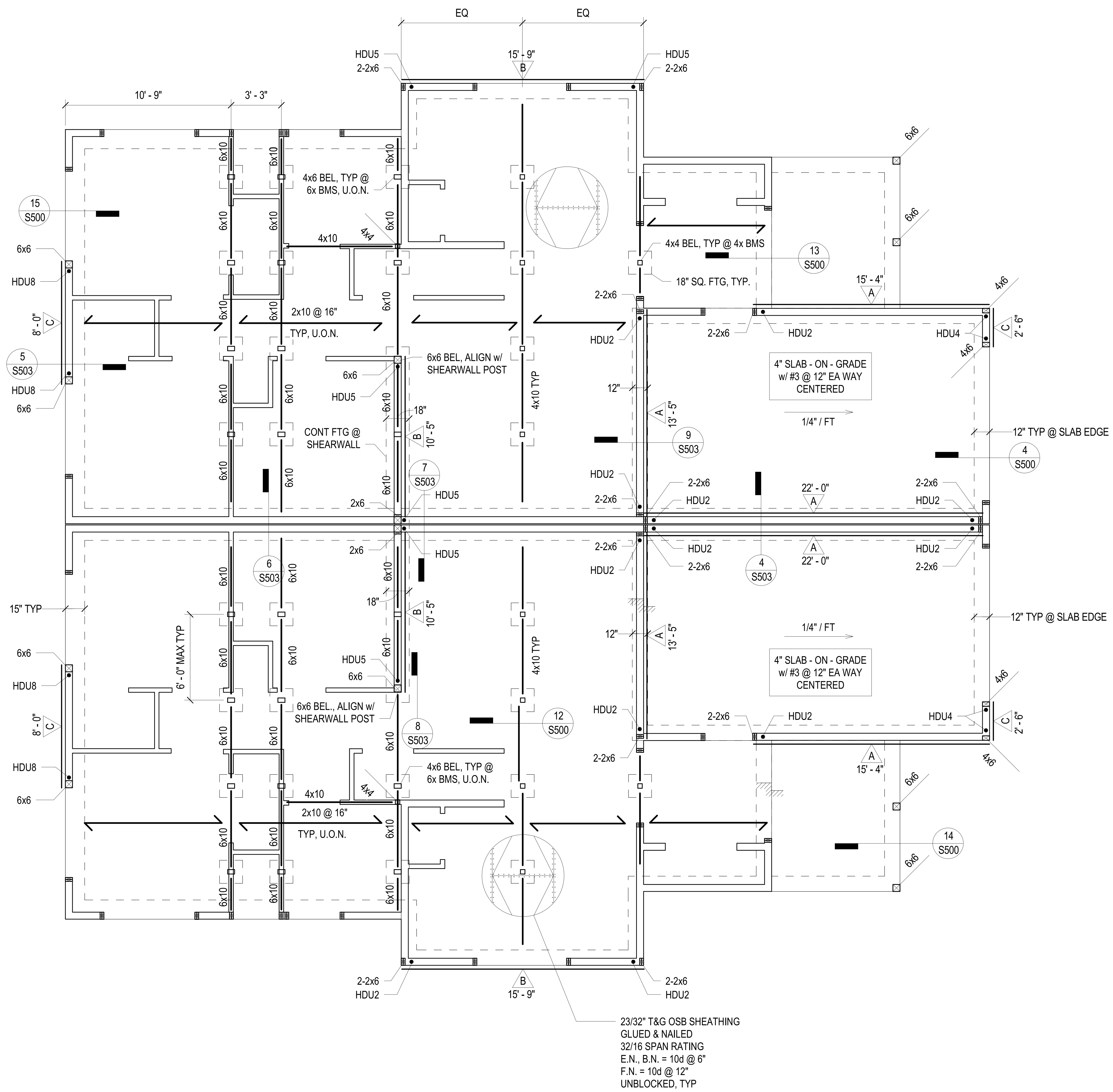

4 BEDROOM FOUNDATION PLAN TYPE A (1)

1/4" = 1'-0"

TRAVOIS
ARCHITECTURE, PC

Coyote Valley Homes I, LIHTC

Redwood Valley, California

ENGINEER

TKJ STRUCTURAL ENGINEERING
9820 Willow Creek Rd., Ste. 455
San Diego, California 92131
858.649.1700 | www.tkjse.com

STAMP

REGISTERED PROFESSIONAL ENGINEER
TIMOTHY ... JACQUES
S 4845
EXP. 6-30-19
STRUCTURAL
STATE OF CALIFORNIA

REVISIONS	DATE
40% CDs	07/28/17
Progress Set	09/01/17
75% CDs	09/26/17
100% CDs	10/27/17

S400.1

4 BEDROOM FOUNDATION PLAN TYPE A

17065

ALL IDEAS, DESIGNS AND ARRANGEMENTS INDICATED ON THESE DRAWINGS ARE THE PROPERTY OF TKJ STRUCTURAL ENGINEERING, INC., AND ARE INTENDED TO BE USED IN CONNECTION WITH THIS SPECIFIC PROJECT ONLY, AND SHALL NOT BE USED FOR ANY OTHER PURPOSE WHATSOEVER WITHOUT THE WRITTEN CONSENT OF THE ENGINEER

SHEET NOTES

1. REFERENCE SHEET S100 FOR SHEET NOTES, LEGEND & ABBREVIATIONS.

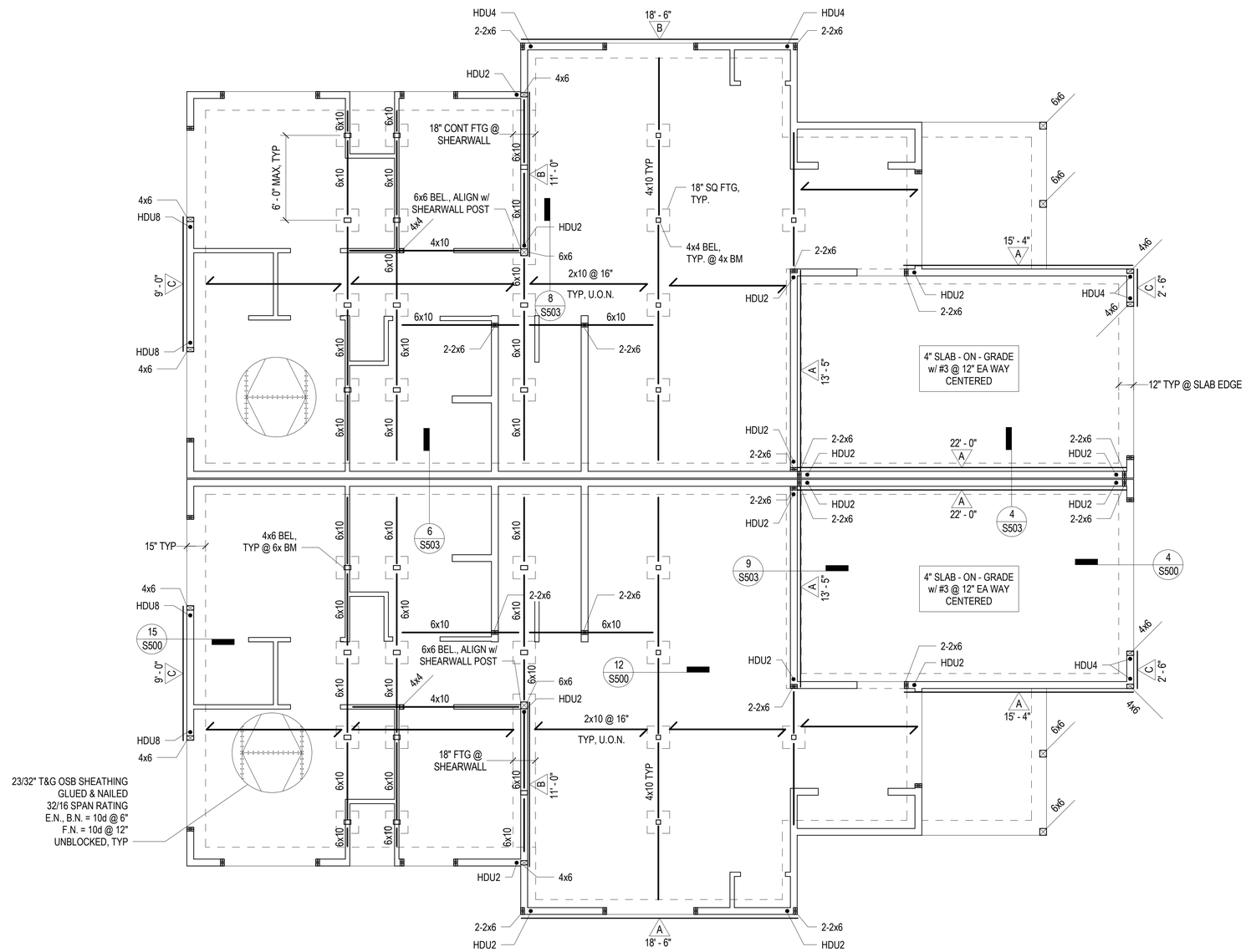

4 BEDROOM FOUNDATION PLAN TYPE B (1)

1/4" = 1'-0"

TRAVOIS
ARCHITECTURE, PC

Coyote Valley Homes I, LIHTC

Redwood Valley, California

ENGINEER

TKJ STRUCTURAL ENGINEERING
9820 Willow Creek Rd., Ste. 455
San Diego, California 92131
858.649.1700 | www.tkjse.com

STAMP

REGISTERED PROFESSIONAL ENGINEER TIMOTHY K. JAQUESS S 4845 EXP. 6-30-19 STRUCTURAL STATE OF CALIFORNIA

REVISIONS	DATE
40% CDs	07/28/17
Progress Set	09/01/17
75% CDs	09/26/17
100% CDs	10/27/17

S400.2

4 BEDROOM FOUNDATION PLAN TYPE B

17065

ALL IDEAS, DESIGNS AND ARRANGEMENTS INDICATED ON THESE DRAWINGS ARE THE PROPERTY OF TKJ STRUCTURAL ENGINEERING, INC., AND ARE INTENDED TO BE USED IN CONNECTION WITH THIS SPECIFIC PROJECT ONLY, AND SHALL NOT BE USED FOR ANY OTHER PURPOSE WHATSOEVER WITHOUT THE WRITTEN CONSENT OF THE ENGINEER.

SHEET NOTES

1. REFERENCE SHEET S100 FOR SHEET NOTES, LEGEND & ABBREVIATIONS.

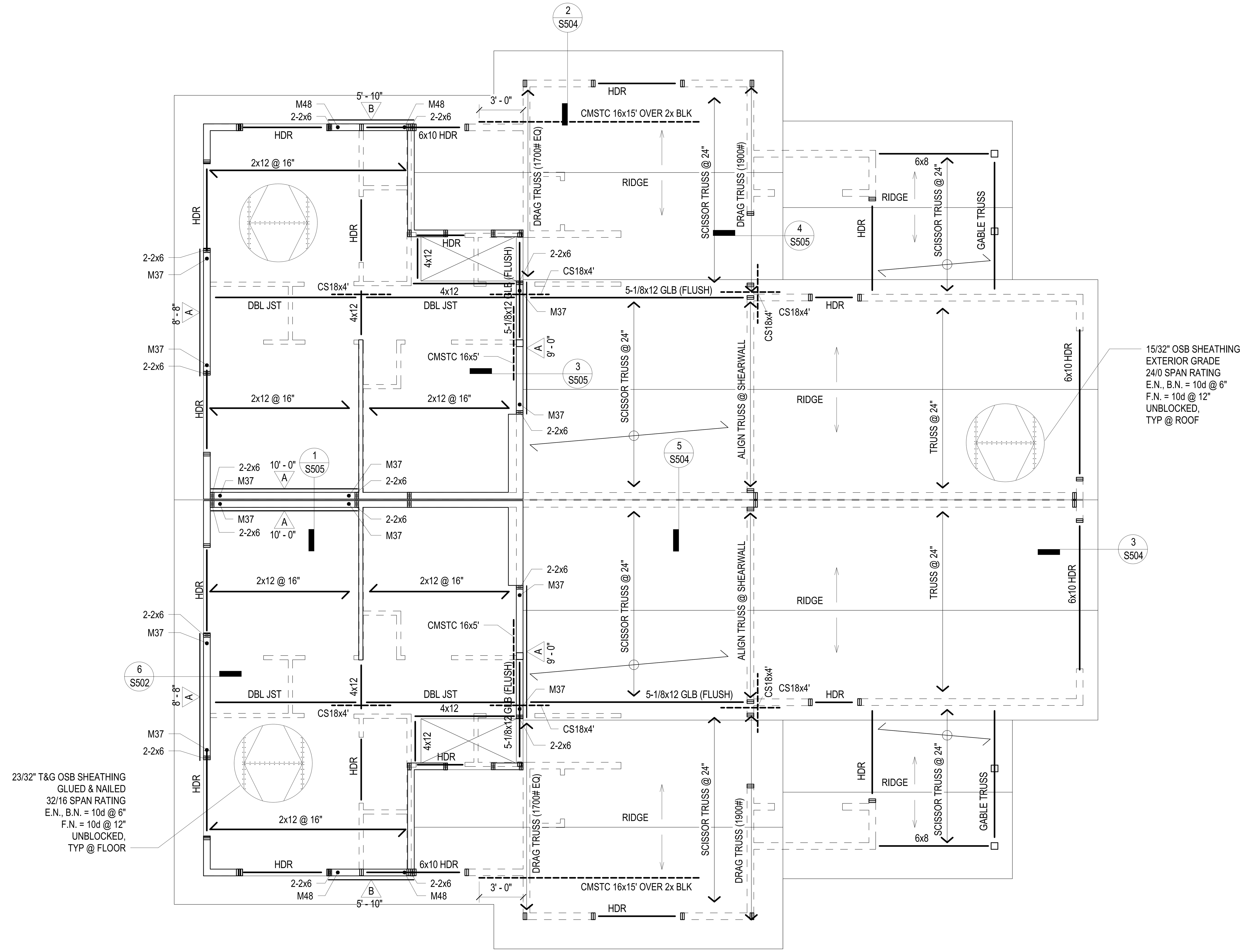

4 BEDROOM LEVEL 2 FRAMING PLAN TYPE A (1)
1/4" = 1'-0"

TRAVOIS
ARCHITECTURE, PC

Coyote Valley Homes I, LIHTC
Redwood Valley, California

ENGINEER

TKJ STRUCTURAL ENGINEERING
9820 Willow Creek Rd., Ste. 455
San Diego, California 92131
858.649.1700 | www.tkjse.com

STAMP

REGISTERED PROFESSIONAL ENGINEER
TIMOTHY J. JACQUESS
S 4845
EXP. 6-30-19
STRUCTURAL
STATE OF CALIFORNIA

REVISIONS	DATE
40% CDs	07/28/17
Progress Set	09/01/17
75% CDs	09/26/17
100% CDs	10/27/17

S401.1

4 BEDROOM LEVEL 2
FRAMING PLAN TYPE A

17065

ALL IDEAS, DESIGNS AND ARRANGEMENTS INDICATED ON THESE DRAWINGS ARE THE PROPERTY OF TKJ STRUCTURAL ENGINEERING, INC., AND ARE INTENDED TO BE USED IN CONNECTION WITH THIS SPECIFIC PROJECT ONLY, AND SHALL NOT BE USED FOR ANY OTHER PURPOSE WHATSOEVER WITHOUT THE WRITTEN CONSENT OF THE ENGINEER

SHEET NOTES

1. REFERENCE SHEET S100 FOR SHEET NOTES, LEGEND & ABBREVIATIONS.

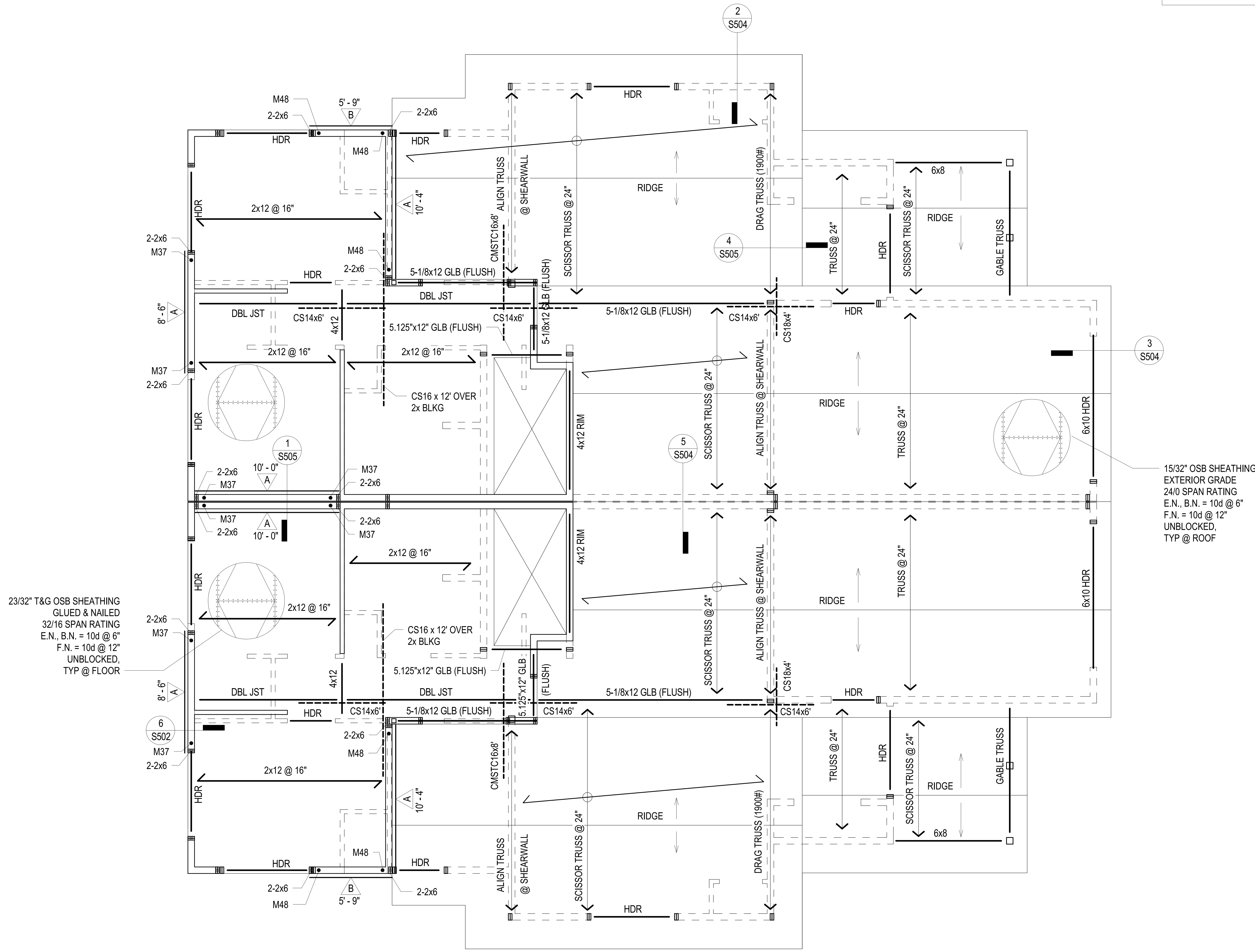

4 BEDROOM LEVEL 2 FRAMING PLAN TYPE B (1)

1/4" = 1'-0"

TRAVOIS
ARCHITECTURE, PC

Coyote Valley Homes I, LIHTC

Redwood Valley, California

ENGINEER

TKJ STRUCTURAL ENGINEERING
9820 Willow Creek Rd., Ste. 455
San Diego, California 92131
858.649.1700 | www.tkjse.com

STAMP

REVISIONS	DATE
40% CDs	07/28/17
Progress Set	09/01/17
75% CDs	09/26/17
100% CDs	10/27/17

S401.2

4 BEDROOM LEVEL 2 FRAMING PLAN TYPE B

17065

ALL IDEAS, DESIGNS AND ARRANGEMENTS INDICATED ON THESE DRAWINGS ARE THE PROPERTY OF TKJ STRUCTURAL ENGINEERING, INC., AND ARE INTENDED TO BE USED IN CONNECTION WITH THIS SPECIFIC PROJECT ONLY, AND SHALL NOT BE USED FOR ANY OTHER PURPOSE WHATSOEVER WITHOUT THE WRITTEN CONSENT OF THE ENGINEER

SHEET NOTES

1. REFERENCE SHEET S100 FOR SHEET NOTES, LEGEND & ABBREVIATIONS.

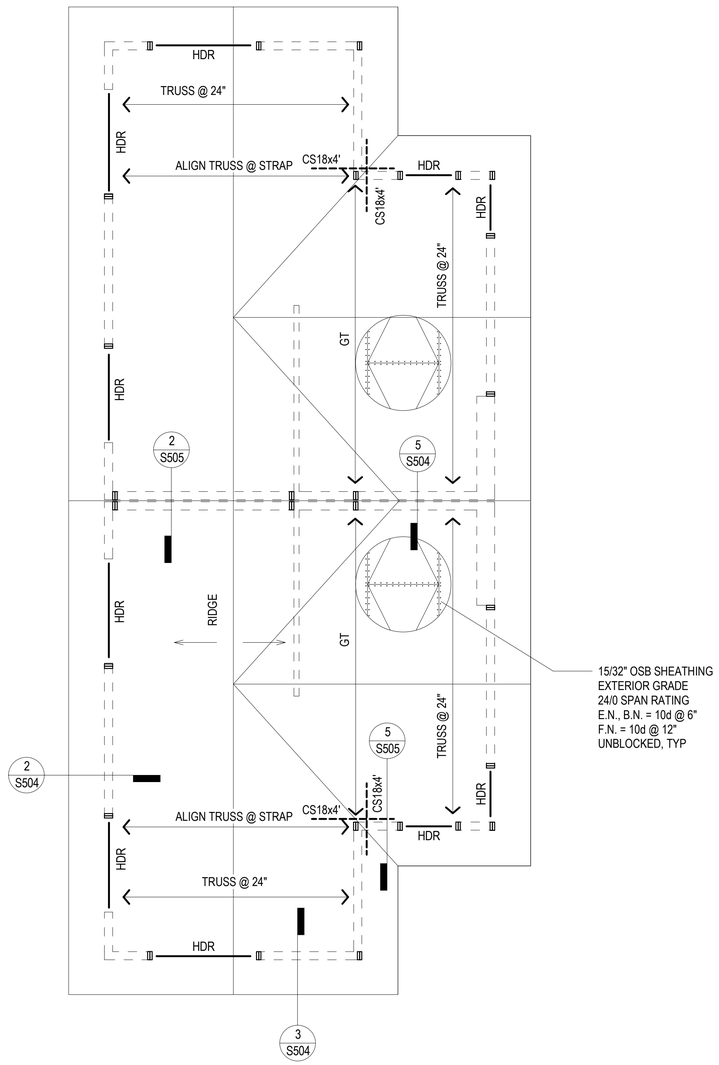

4 BEDROOM ROOF FRAMING PLAN TYPE A (1)
1/4" = 1'-0"

TRAVOIS
ARCHITECTURE, PC

Coyote Valley Homes I, LIHTC

Redwood Valley, California

ENGINEER

TKJ STRUCTURAL ENGINEERING
9820 Willow Creek Rd., Ste. 455
San Diego, California 92131
858.649.1700 | www.tkjse.com

STAMP

REGISTERED PROFESSIONAL ENGINEER
TIMOTHY K. JACUESS
S 4845
EXP. 6-30-19
STRUCTURAL
STATE OF CALIFORNIA

REVISIONS	DATE
40% CDs	07/28/17
Progress Set	09/01/17
75% CDs	09/26/17
100% CDs	10/27/17

S402.1

4 BEDROOM ROOF FRAMING PLAN TYPE A

17065

ALL IDEAS, DESIGNS AND ARRANGEMENTS INDICATED ON THESE DRAWINGS ARE THE PROPERTY OF TKJ STRUCTURAL ENGINEERING, INC., AND ARE INTENDED TO BE USED IN CONNECTION WITH THIS SPECIFIC PROJECT ONLY, AND SHALL NOT BE USED FOR ANY OTHER PURPOSE WHATSOEVER WITHOUT THE WRITTEN CONSENT OF THE ENGINEER.

SHEET NOTES

1. REFERENCE SHEET S100 FOR SHEET NOTES, LEGEND & ABBREVIATIONS.

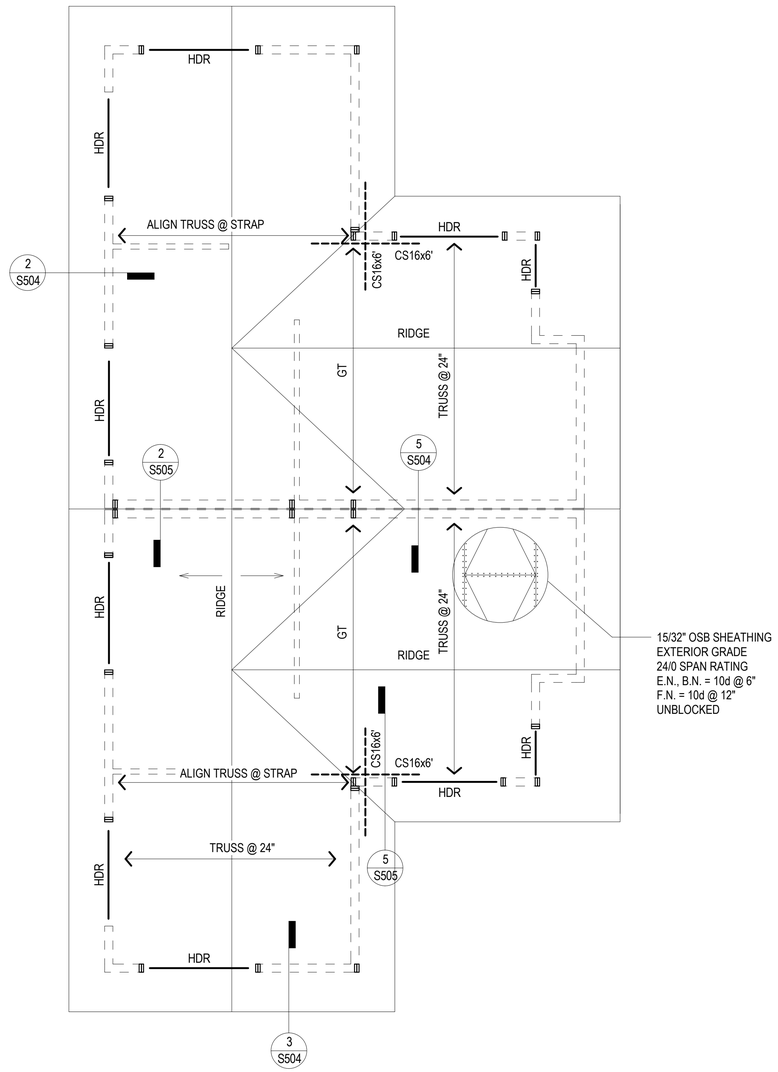

4 BEDROOM ROOF FRAMING PLAN TYPE B (1)

1/4" = 1'-0"

TRAVOIS
ARCHITECTURE, PC

Coyote Valley Homes I, LIHTC

Redwood Valley, California

ENGINEER

TKJ STRUCTURAL ENGINEERING
9820 Willow Creek Rd., Ste. 455
San Diego, California 92131
858.649.1700 | www.tkjse.com

STAMP

REVISIONS	DATE
40% CDs	07/28/17
Progress Set	09/01/17
75% CDs	09/26/17
100% CDs	10/27/17

S402.2

4 BEDROOM ROOF FRAMING PLAN TYPE B

17065

ALL IDEAS, DESIGNS AND ARRANGEMENTS INDICATED ON THESE DRAWINGS ARE THE PROPERTY OF TKJ STRUCTURAL ENGINEERING, INC., AND ARE INTENDED TO BE USED IN CONNECTION WITH THIS SPECIFIC PROJECT ONLY, AND SHALL NOT BE USED FOR ANY OTHER PURPOSE WHATSOEVER WITHOUT THE WRITTEN CONSENT OF THE ENGINEER.

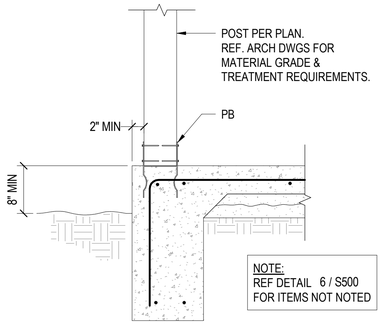

Porch Post Base 14
1" = 1'-0"

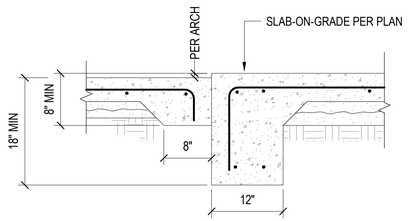

Slab Step @ Porch Slab 11
1" = 1'-0"

CONCRETE REINFORCING DEVELOPMENT & SPLICE LENGTHS (INCHES)																								
BAR LOCATION	CONCRETE		BAR SIZE																					
	TYPE	STRENGTH	#3			#4			#5			#6			#7			#8			#9			
			Ld	Ls	Ldh	Ld	Ls	Ldh	Ld	Ls	Ldh	Ld	Ls	Ldh	Ld	Ls	Ldh	Ld	Ls	Ldh	Ld	Ls	Ldh	
ALL CONCRETE	NWC	f'c > 2.5ksi	12	16	6	14	19	8	18	23	11	22	28	13	32	41	15	36	47	17	41	53	19	

NOTES:

1. Ld = DEVELOPMENT LENGTH

Ls = LAP SPLICE LENGTH

Ldh = HOOK DEVELOPMENT LENGTH

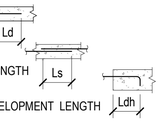

2. WHEN SPLICING BARS OF DIFFERENT SIZE, USE LAP SPLICE LENGTH OF LARGER BAR, U.O.N.

3. STAGGER EA SPACE AS FOLLOWS:

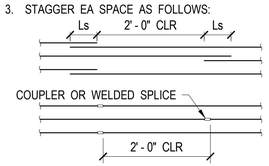

MULTIPLY THE TABLE LENGTHS ABOVE BY 1.5 FOR EPOXY COATED REINF

Reinforcing Development & Splice Lengths
N.T.S. 5

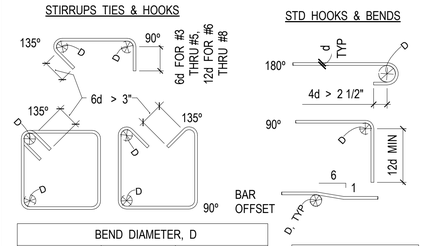

BEND DIAMETER, D		
BAR SIZE	STD HOOKS & BENDS	STIRRUPS TIES & HOOPS
#3 THRU #5	6d	4d
#6 THRU #8	6d	6d
#9 THRU #11	8d	NA
#14 THRU #18	10d	NA

NOTE:
DO NOT FIELD BEND REINFORCEMENT PARTIALLY EMBEDDED IN CONCRETE

Hooks and Bends 1
N.T.S.

NOTE:
REFERENCE GEOTECH REPORT FOR EXCAVATION AND COMPACTION REQUIREMENTS.

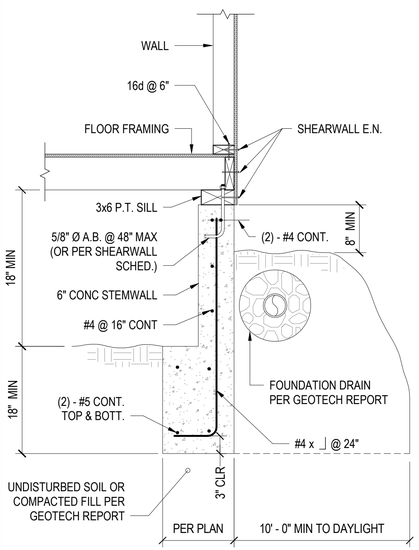

Footing & Stemwall 15
N.T.S.

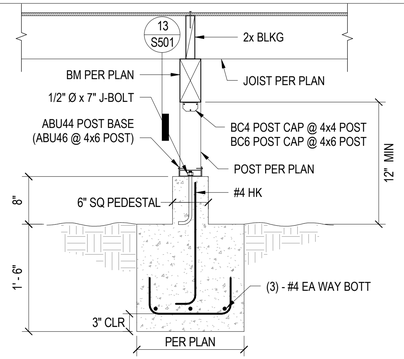

Interior Floor Footing 12
N.T.S.

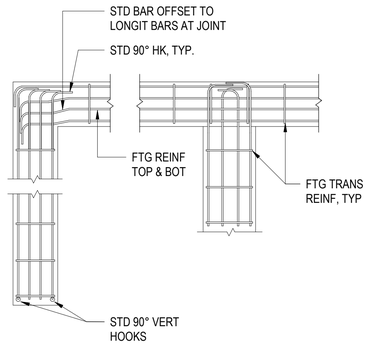

Ftng. Reinf. at Corners and Intersections 9
N.T.S.

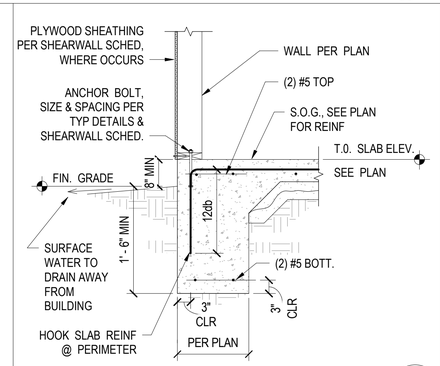

Perimeter Wall Footing 6
N.T.S.

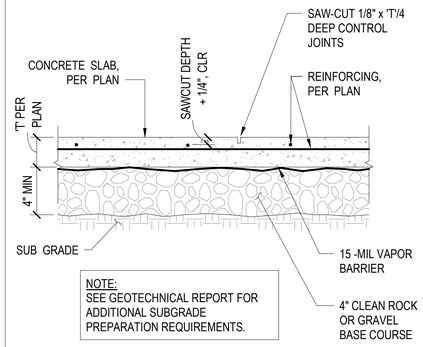

NOTE:
SEE GEOTECHNICAL REPORT FOR ADDITIONAL SUBGRADE PREPARATION REQUIREMENTS.

Typical Slab on Grade 2
1" = 1'-0"

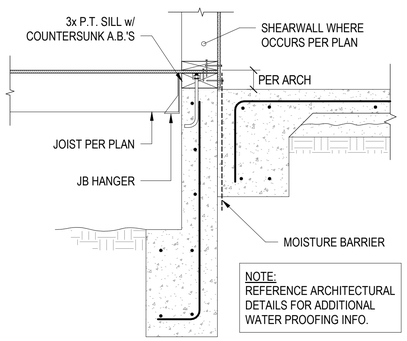

NOTE:
REFERENCE ARCHITECTURAL DETAILS FOR ADDITIONAL WATER PROOFING INFO.

Porch @ Raised Floor 13
N.T.S.

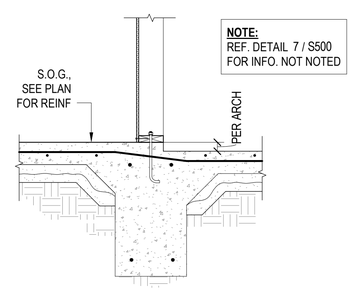

NOTE:
REF. DETAIL 7 / S500
FOR INFO. NOT NOTED

Interior Bearing Wall Footing @ Slab Step 10
N.T.S.

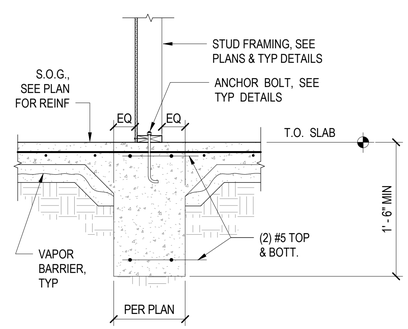

Interior Bearing Wall Footing 7
N.T.S.

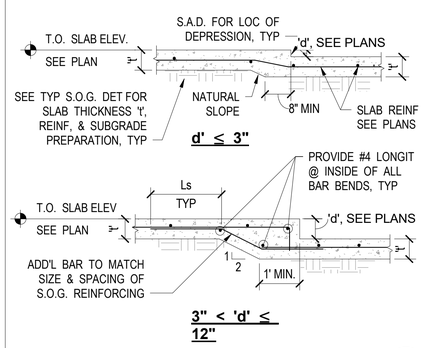

Depressions in Slab on Grade 3
N.T.S.

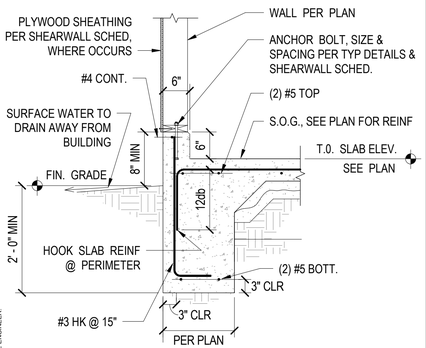

Garage Wall Footing 16
N.T.S.

SPREAD FOOTING SCHEDULE						
TYPE MARK	FOOTING SIZE			REINF. EACH WAY		TYPE COMMENTS
	WIDTH	LENGTH	DEPTH	# OF REBAR	REBAR SIZE	
F2.5	2' - 6"	2' - 6"	1' - 0"	2	#5	
F3	3' - 0"	3' - 0"	1' - 0"	4	#5	
F4	4' - 0"	4' - 0"	1' - 0"	4	#5	

AT SLAB EDGE

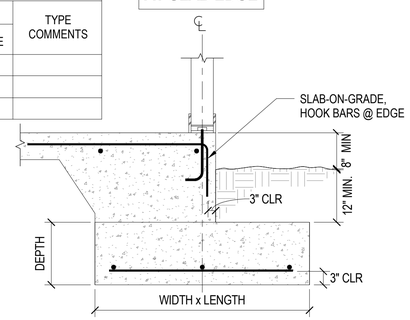

INTERIOR FOOTING

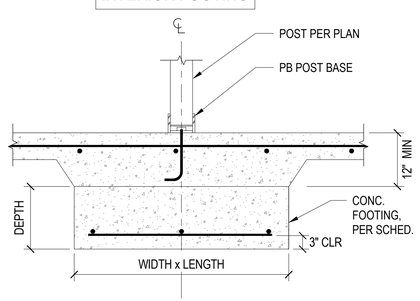

Typical Footing at Post 8
N.T.S.

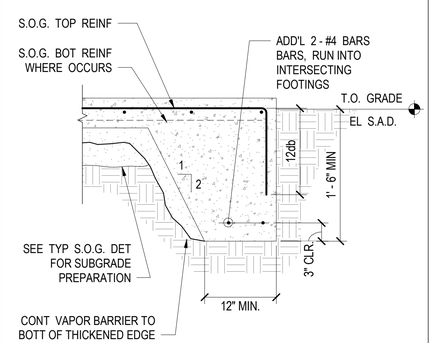

Free Edge at Slab on Grade 4
N.T.S.

TRAVOIS
ARCHITECTURE, PC

Coyote Valley Homes I, LIHTC

Redwood Valley, California

ENGINEER

TKJ STRUCTURAL ENGINEERING
9820 Willow Creek Rd., Ste. 455
San Diego, California 92131
858.649.1700 | www.tkjse.com

STAMP

REGISTERED PROFESSIONAL ENGINEER
TIMOTHY KRUEGER JACKES
S 4845
EXP. 6-30-19
STRUCTURAL
STATE OF CALIFORNIA

REVISIONS	DATE
40% CDs	07/28/17
Progress Set	09/01/17
75% CDs	09/26/17
100% CDs	10/27/17

S500

Typical Concrete Details

17065

ALL IDEAS, DESIGNS AND ARRANGEMENTS INDICATED ON THESE DRAWINGS ARE THE PROPERTY OF TKJ STRUCTURAL ENGINEERING, INC. AND ARE INTENDED TO BE USED IN CONNECTION WITH THIS SPECIFIC PROJECT ONLY, AND SHALL NOT BE USED FOR ANY OTHER PURPOSE WHATSOEVER WITHOUT THE WRITTEN CONSENT OF THE ENGINEER.

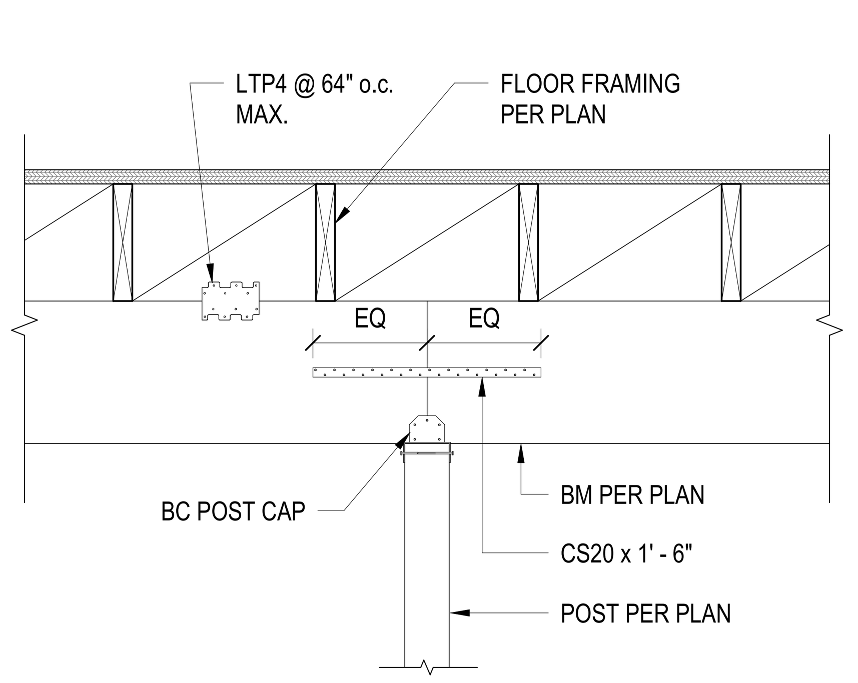

Splice @ Raised Floor Beam 13
N.T.S.

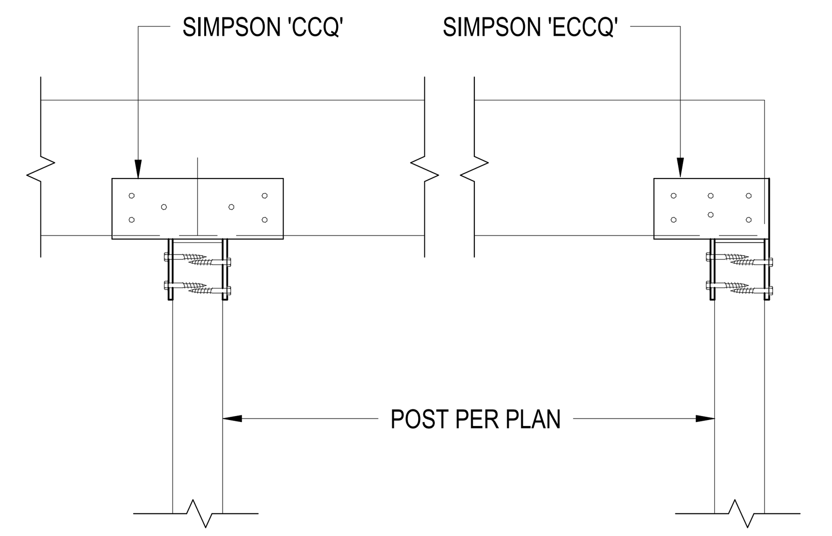

Typical Post to Beam Connection 9
N.T.S.

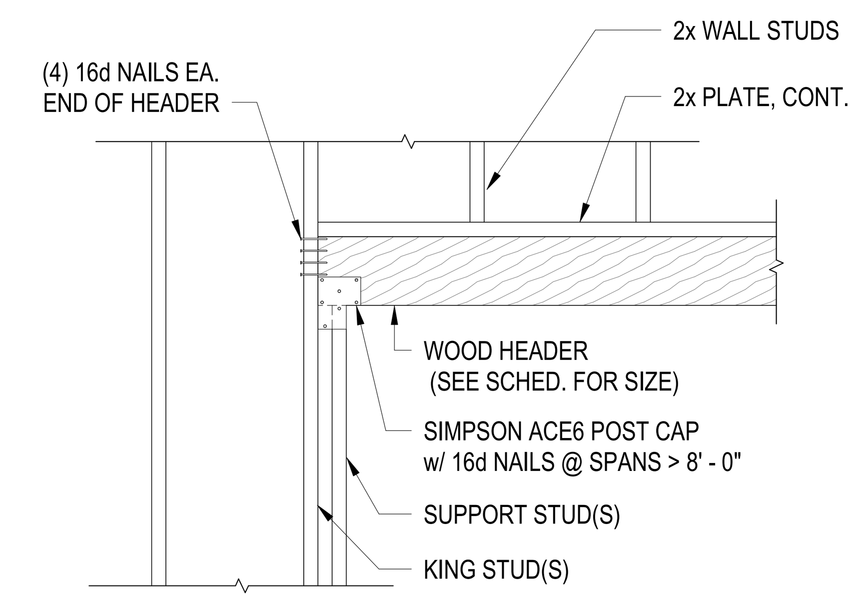

2x6 WALL FRAMING				
HEADER BEAM	MAXIMUM HEADER SPAN	SUPPORT STUD(S)	KING STUD(S)	HEADER BEAM
H-61	NON-BEARING WALLS	(1) 2x6	(1) 2x6	(1) 4x6
H-62	4' - 0" OR LESS	(2) 2x6	(1) 2x6	(1) 6x8
H-63	4' - 1" TO 8' - 0"	(2) 2x6	(1) 2x6	(1) 6x10
H-64	8' - 1" TO 12' - 0"	4x6 OR (2) 2x6	(2) 2x6	(1) 6x12

2x4 WALL FRAMING				
HEADER BEAM	MAXIMUM HEADER SPAN	SUPPORT STUD(S)	KING STUD(S)	HEADER BEAM
H-41	NON-BEARING WALLS	(1) 2x4	(1) 2x4	(1) 4x6
H-42	4' - 0" OR LESS	(2) 2x4	(1) 2x4	(1) 4x8
H-43	4' - 1" TO 8' - 0"	(2) 2x4	(1) 2x4	(1) 4x10
H-44	8' - 1" TO 12' - 0"	4x4 OR (2) 2x4	(2) 2x4	(1) 4x12

Typical Wood Header Detail and Schedule 7
N.T.S.

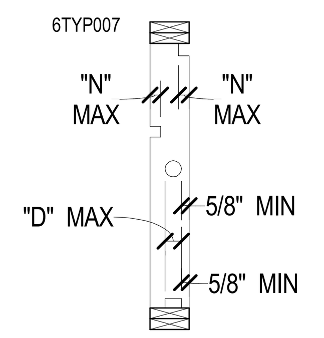

NOTES:

1. ONLY ONE MAX SIZE OF NOTCH OR BORED HOLE IS ALLOWED PER STUD.
2. NON-BEARING STUD WALL IS DEFINED AS A PARTITION WALL SUPPORTING NO LOAD OTHER THAN ITS OWN WEIGHT.
3. BORED HOLES SHALL NOT BE LOCATED AT THE SAME SECTION OF STUD AS A CUT OR NOTCH.

STUD	BEARING & EXT		NON - BEARING	
	"N"	"D"	"N"	"D"
2 x 4	7 / 8"	1 3/8" ø	1 3/8"	2" ø
2 x 6	1 3 / 8"	2 1/8" ø	2 1/8"	3 1/4" ø
2 x 8	1 7 / 8"	3" ø	3"	4 1/2" ø
2 x 10	2 3 / 8"	3 3/4" ø	3 3/4"	5 5/8" ø

Typical Stud Notching & Holes 3
N.T.S.

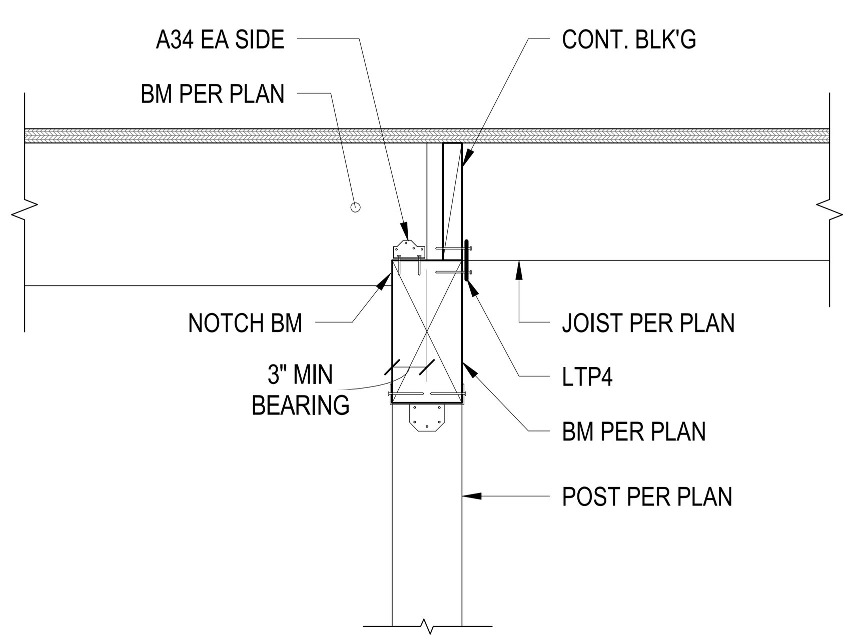

Floor BM To BM 14
N.T.S.

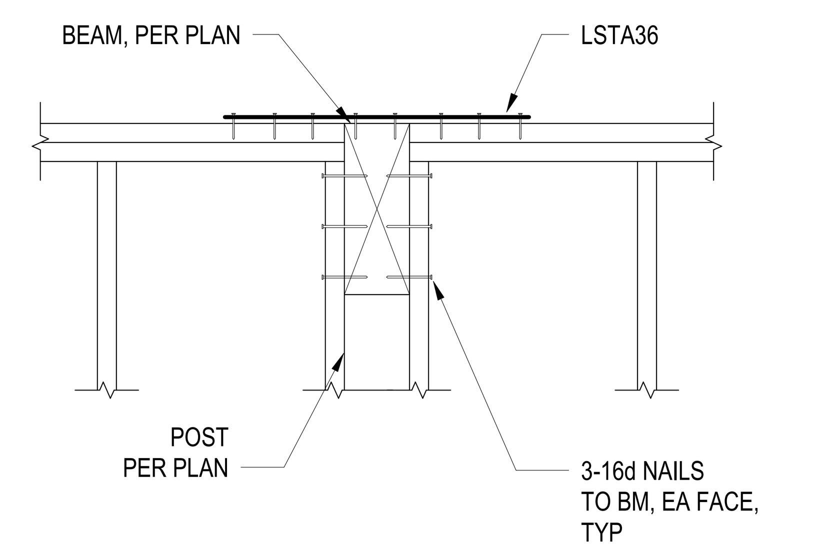

Typical Strap at Beam Flush with Wall 10
N.T.S.

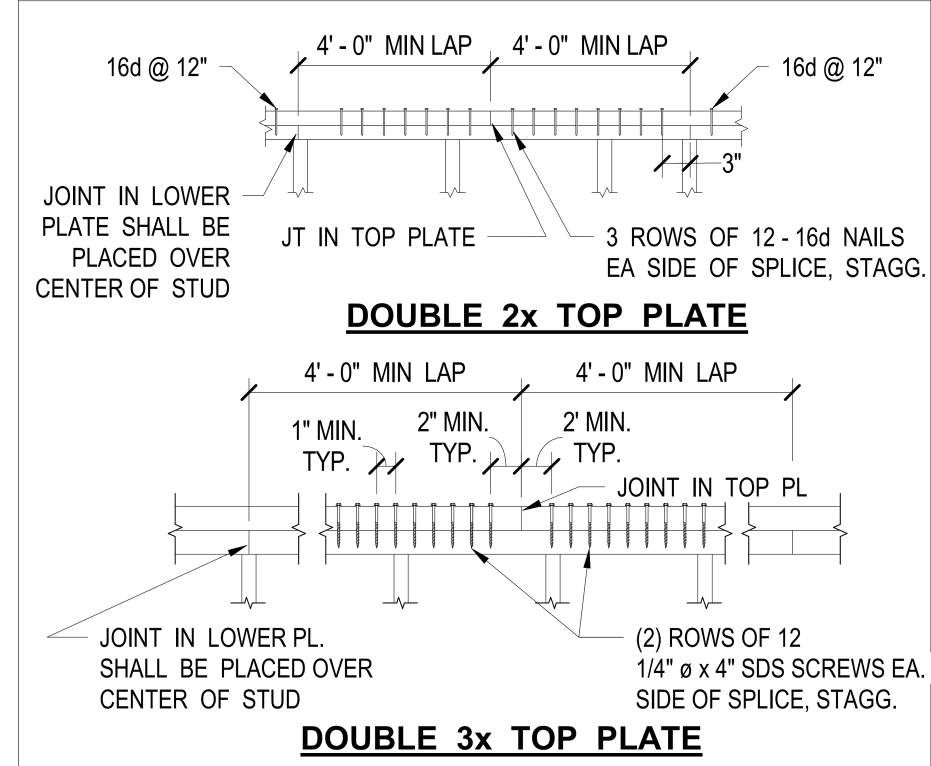

Typical Top Plate Splice 4
N.T.S.

NOTE:
SEE 13 / S501
FOR ADDITIONAL INFO

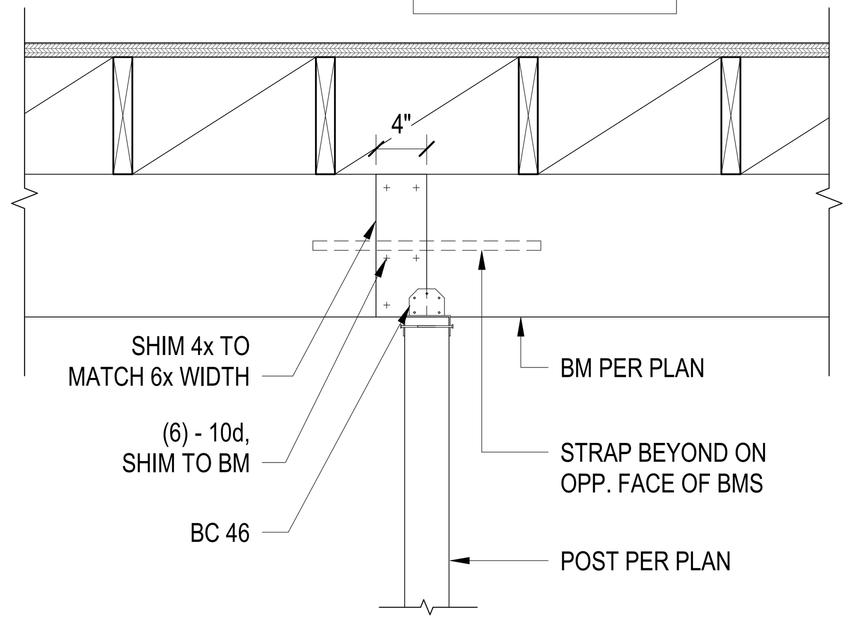

4x To 6x Floor BM Connection 15
N.T.S.

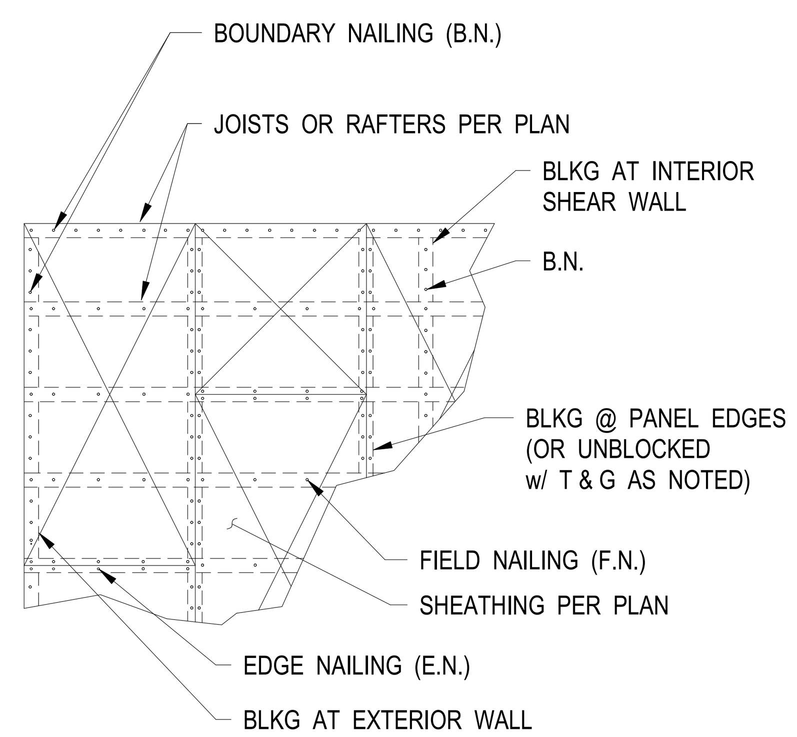

Typical Floor / Roof Sheathing 11
N.T.S.

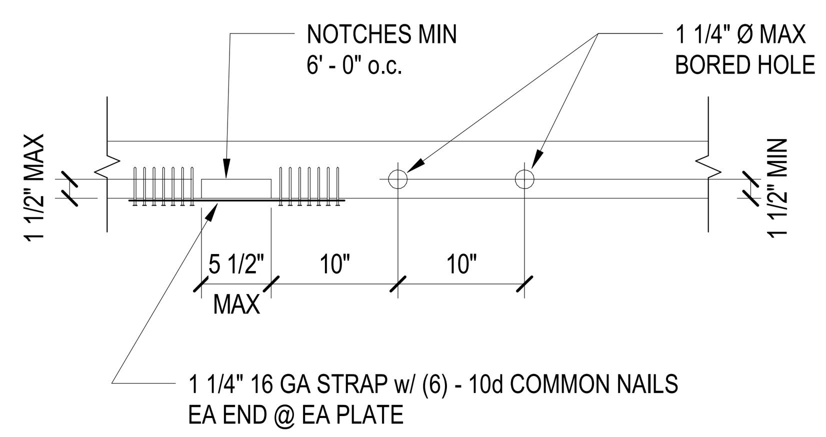

2 x 4 DBL TOP PLATE
2 x 4 OR 3 x 4 SILL PLATE SIM

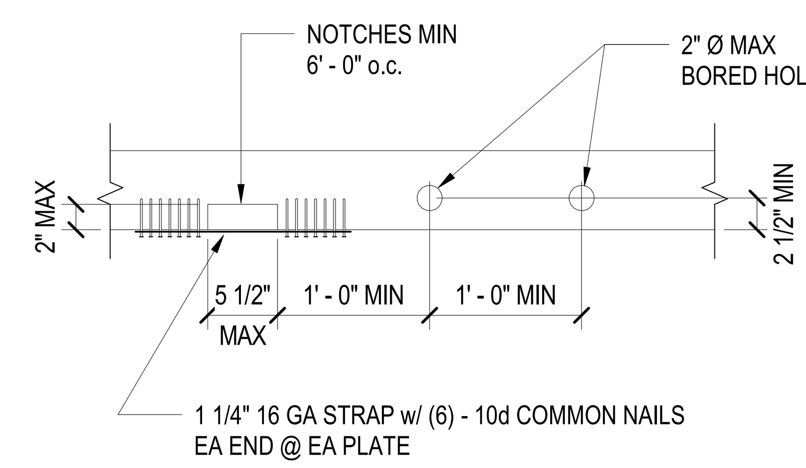

2 x 6 DBL TOP PLATE
2 x 6 OR 3 x 6 SILL PLATE SIM

Typ. Notches & Boring in Top & Bott. Plates 8
N.T.S.

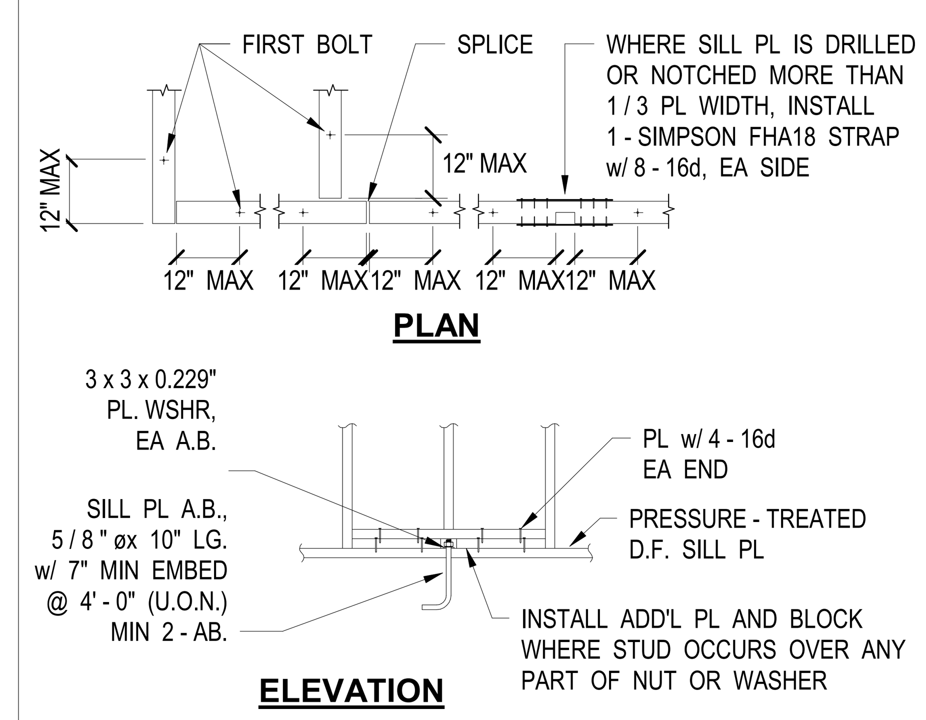

Typical Sill Plate Anchorage 5
N.T.S.

CONNECTION	NAILING
JOIST TO SILL OR GIRDER, TOENAIL	3-8d
BRIDGING TO JOIST, TOENAIL EACH END	2-8d
1" X 6" SUBFLOOR TO EACH JOIST, FACE NAIL	2-8d
WIDER THAN 1" X 6" SUBFLOOR TO EACH JOIST, FACE NAIL	3-8d
2" SUBFLOOR TO JOIST OR GIRDER, BLIND AND FACE NAIL	2-16d
SOLE PLATE TO JOIST OR BLOCKING, TYPICAL FACE NAIL SOLE PLATE TO JOIST OR BLOCKING, BRACED WALL PANELS	16d @ 16" 3-16d PER 16"
TOP PLATE TO STUD, END NAIL	2-16d
STUD TO SOLE PLATE	4 - 8d, TOENAIL OR 2 - 16d, END NAIL
DOUBLE STUDS, FACE NAIL	16d @ 24" O.C.
DOUBLE TOP PLATES, TYP. FACE NAIL DOUBLE TOP PLATES, LAP SPLICE	16d @ 16" O.C. 8 - 16d
BLOCKING BETWEEN JOISTS OR RAFTERS TO TOP PLATE, TOENAIL	3-8d
RIM JOIST TO TOP PLATE, TOENAIL	8d @ 6" O.C.
TOP PLATES, LAPS AND INTERSECTIONS, FACE NAIL	2 - 16d
CONTINUOUS HEADER, TWO PIECES	16d @ 16" O.C. ALONG EACH EDGE
CEILING JOISTS TO PLATE, TOENAIL	3-8d
CONTINUOUS HEADER TO STUD, TOENAIL	4-8d
CEILING JOISTS, LAPS OVER PARTITIONS, FACE NAIL	3-16d
CELING JOISTS TO PARALLEL RAFTERS, FACE NAIL	3-16d
RAFTER TO PLATE, TOENAIL	3-8d
1" BRACE TO EACH STUD AND PLATE, FACE NAIL	2-8d
1" x 8" SHEATHING OR LESS TO EACH BEARING, FACE NAIL	2-8d
WIDER THAN 1" x 8" SHTHNG TO EACH BEARING, FACE NAIL	3-8d
BUILT-UP CORNER STUDS	16d @ 24" O.C.
BUILT-UP GIRDER AND BEAMS	20d @ 32" O.C. @ TOP AND BOTTOM AND STAGGERED 2 - 20 @ ENDS AND @ EACH SPLICE
2" PLANKS	2 - 16d @ EACH BEARING

NOTES:

1. COMMON OR BOX NAILS MAY BE USED U.O.N.
2. DIAPHRAGM SHEATHING NAILS OR OTHER APPROVED SHEATHING CONNECTORS SHALL BE DRIVEN SO THAT THEIR HEAD OR CROWN IS FLUSH W/ THE SURFACE OF THE SHEATHING.

Typical Nailing Schedule 1
N.T.S.

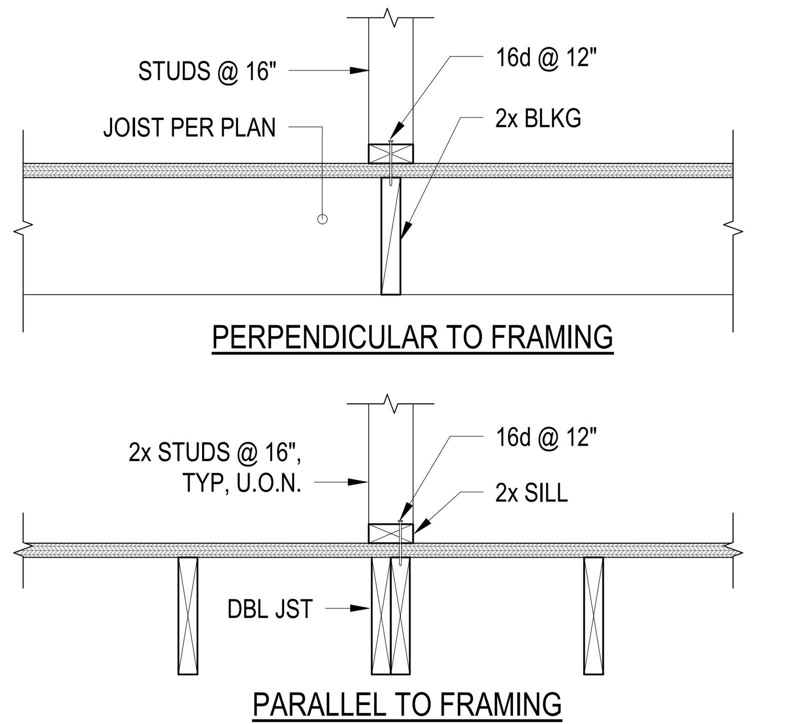

Bottom Of Non-Bearing Partition Wall 16
N.T.S.

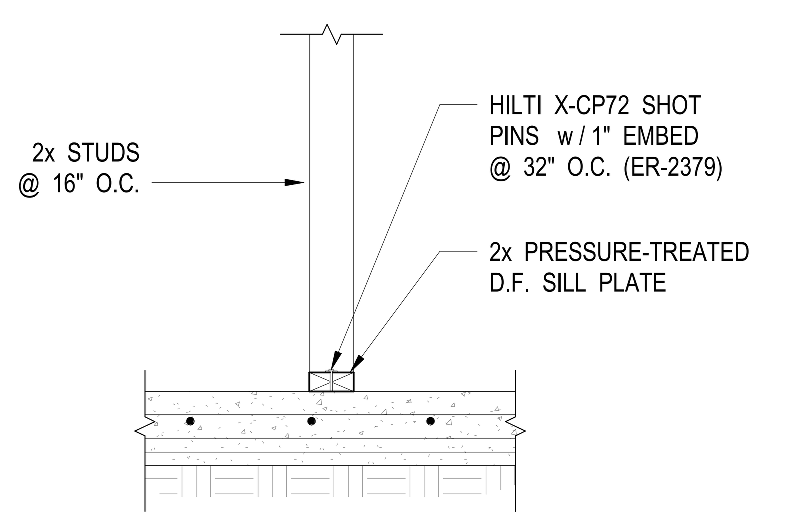

Typical Non-Bearing Partition Anchorage 12
N.T.S.

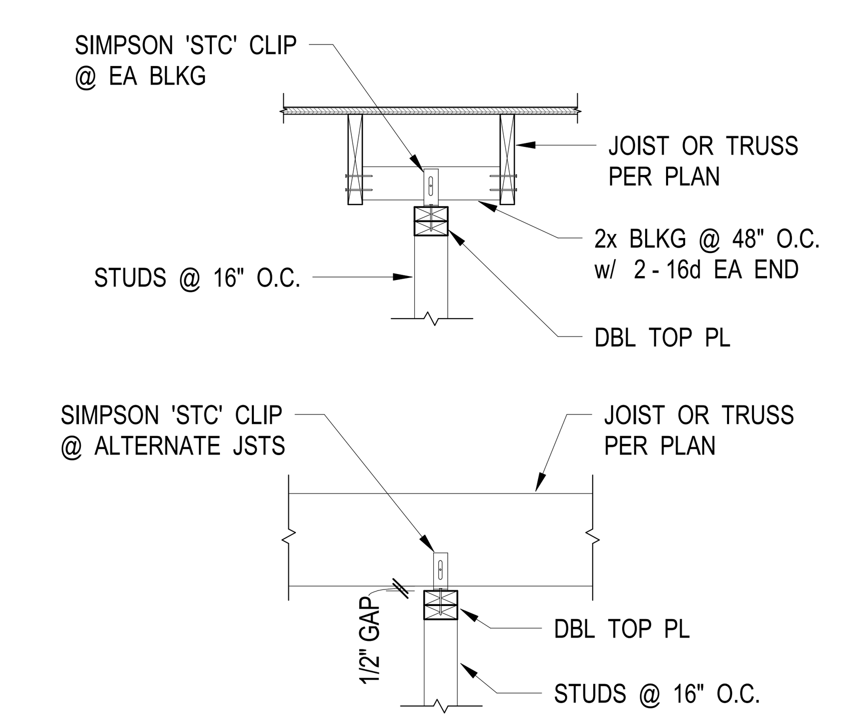

Typical Top of Non-Bearing Partition Wall 6
N.T.S.

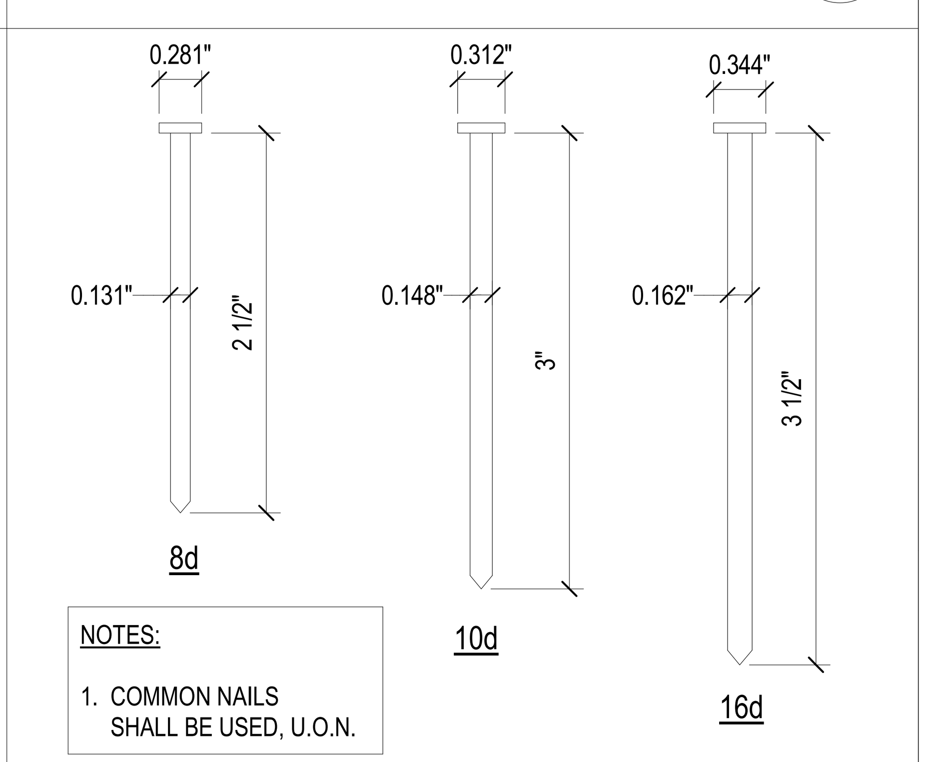

NOTES:

1. COMMON NAILS SHALL BE USED, U.O.N.

Typical Common Nail Dimensions 2
N.T.S.

TRAVOIS
ARCHITECTURE, PC

Coyote Valley Homes I, LIHTC
Redwood Valley, California

ENGINEER

TKJ STRUCTURAL ENGINEERING
9820 Willow Creek Rd., Ste. 455
San Diego, California 92131
858.649.1700 | www.tkjse.com

STAMP

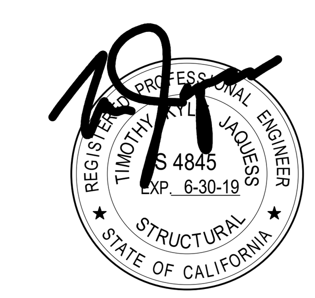

REVISIONS	DATE
40% CDs	07/28/17
Progress Set	09/01/17
75% CDs	09/26/17
100% CDs	10/27/17

S501

Typical Wood Details

17065

ALL IDEAS, DESIGNS AND ARRANGEMENTS INDICATED ON THESE DRAWINGS ARE THE PROPERTY OF TKJ STRUCTURAL ENGINEERING, INC., AND ARE INTENDED TO BE USED IN CONNECTION WITH THIS SPECIFIC PROJECT ONLY, AND SHALL NOT BE USED FOR ANY OTHER PURPOSE WHATSOEVER WITHOUT THE WRITTEN CONSENT OF THE ENGINEER

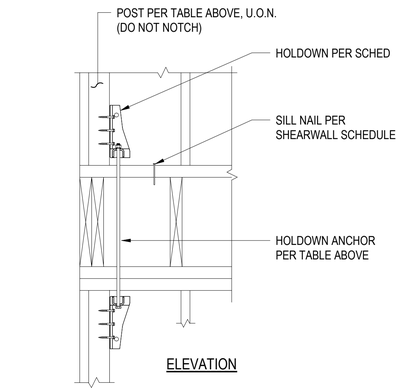

ELEVATION

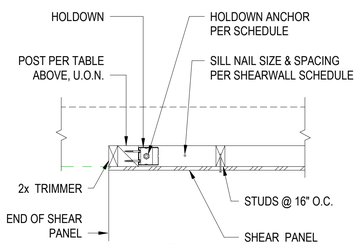

PLAN

THRD ROD HOLDOWN

HOLDOWN SCHEDULE						
MARK	HOLDOWN (1)	POST SIZE	FASTENERS	THRD ROD DIAMETER	ALLOWABLE TENSION	REMARKS
M28	MSTC28	4x(2)	12-16d	—	1165#	
M37	MST37	4x(2)	20-16d	—	2465#	
M48	MST48	4x(2)	32-16d	—	3960#	
M60	MST60	4x(2)	46-16d	—	6245#	
M48 B	MSTC48B3	4x(2)	54-10d	—	3930#	
M66 B	MSTC66B3	4x(2)	56-10d	—	4440#	

HOLDOWN SCHEDULE NOTES

1. SEE SIMPSON STRONG-TIE CATALOG FOR ADDITIONAL INFORMATION.
2. CONTRACTOR'S OPTION TO USE DBL 2x DF STUDS IN LIEU OF 4x POST. FASTEN DBL 2x STUDS w/ 16d @ 3" O.C., STAGGERED

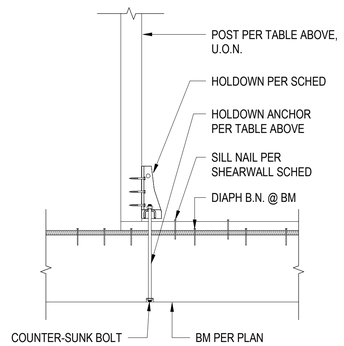

ELEVATION

THRD ROD HOLDOWN TO BM

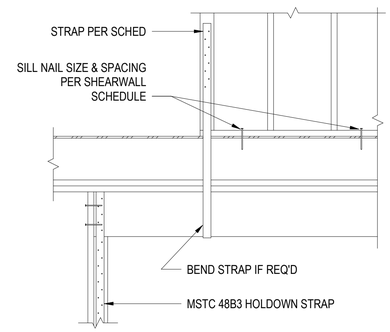

ELEVATION

STRAP HOLDOWN

Holdown Schedule and Details - Upper Floors (4)
N.T.S.

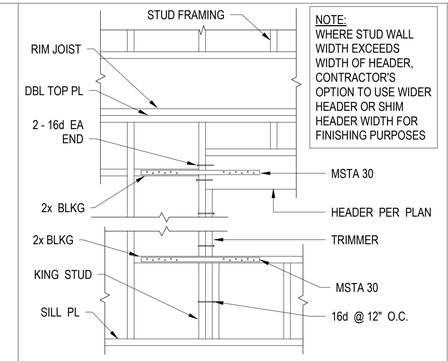

NOTE:
WHERE STUD WALL WIDTH EXCEEDS WIDTH OF HEADER, CONTRACTOR'S OPTION TO USE WIDER HEADER OR SHIM HEADER WIDTH FOR FINISHING PURPOSES

Typical Opening in Shear Wall (3)
N.T.S.

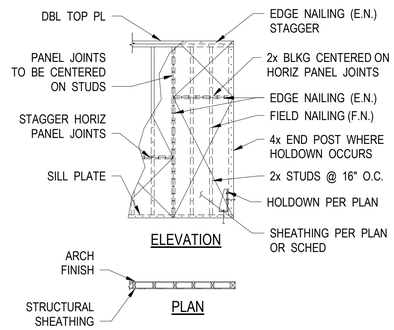

ELEVATION

PLAN

Typical Plywood Shearwall (1)
N.T.S.

HOLDOWN SCHEDULE							
MARK	HOLDOWN (1)	POST SIZE	FASTENERS	ANCHORAGE INTO CONC.		ALLOWABLE TENSION	REMARKS
				ANCHOR SIZE	MIN. EMBED.		
HDU2	HDU2-SDS2.5	4x(2)	6-SIMPSON SDS 1/4 x 2 1/2	SSTB16	12 5/8"	3075#	
HDU4	HDU4-SDS2.5	4x(2)	10-SIMPSON SDS 1/4 x 2 1/2	SSTB16	12 5/8"	4565#	
HDU5	HDU5-SDS2.5	4x(2)	14-SIMPSON SDS 1/4 x 2 1/2	SSTB20	16 5/8"	5645#	
HDU8	HDU8-SDS2.5	6x	20-SIMPSON SDS 1/4 x 2 1/2	SSTB28	24 5/8"	7870#	

NOTES:

1. SEE SIMPSON STRONG-TIE CATALOG FOR ADDITIONAL INFORMATION.
2. CONTRACTOR'S OPTION TO USE DBL 2x DF STUDS IN LIEU OF 4x POST. FASTEN 2x STUDS w/ 16d @ 3" O.C., STAGGERED

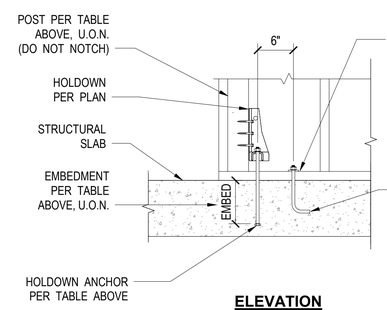

ELEVATION

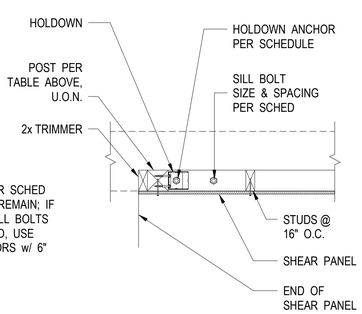

PLAN

HOLDOWN INTO CONCRETE - SLAB - ON - GRADE

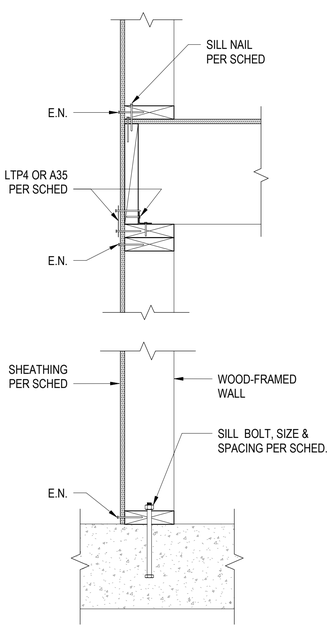

Typ. Shearwall Section (6)
1 1/2" = 1'-0"

MARK	THICKNESS	GRADE / EXPOSURE	NAIL SIZE	"E.N." EDGES	SILL BOLTS OR NAILING	SIMPSON LTP4 / A35 SPACING	SHEAR CAPACITY	REMARKS
A	15 / 32"	STRUCT I 32 / 16	10d	6"	CONC: 5 / 8" ø x 12" A.B.'S @ 48" WOOD: 16d @ 6"	@ 24" O.C.	340 PLF	
B	15 / 32"	STRUCT I 32 / 16	10d	4"	CONC: 5 / 8" ø x 12" A.B.'S @ 36" WOOD: 16d @ 6"	@ 16" O.C.	490 PLF	
C	15 / 32"	STRUCT I 32 / 16	10d	3"	CONC: 5 / 8" ø x 12" A.B.'S @ 30" WOOD: 16d @ 6"	@ 12" O.C.	665 PLF	3x OR DBL 2x FRAMING @ PANEL LAP JOINTS
D	15 / 32"	STRUCT I 32 / 16	10d	2"	CONC: 5 / 8" ø x 12" A.B.'S @ 24" WOOD: 16d @ 6"	@ 9" O.C.	870 PLF	3x OR DBL 2x FRAMING @ PANEL LAP JOINTS
S1	—	—	—	—	CONC: (2) - 5 / 8" ø x 12" A.B.'S	SDS SCREWS PER MANUF	1865 #	SIMPSON SWP 22x8x6 STRONG WALL (ICC ESR-1267)

SHEAR WALL SCHEDULE NOTES

1. ALL NAILS SHALL BE COMMON NAILS, U.O.N.
   8d: 0.131"Ø x 2 1/2"
   16d: 0.162"Ø x 3 1/2"
2. E.N. = EDGE NAILING
   F.N. = FIELD NAILING
3. ALL PLYWOOD PANELS SHALL BE BLOCKED, U.O.N.
4. ALL ANCHOR BOLTS SHALL HAVE A MINIMUM EMBEDMENT OF 7" INTO CONCRETE, U.O.N.
5. FOR TYPICAL VERTICAL SHEAR PANEL APPLICATION SEE DETAIL 1 / S502
6. ALL SHEAR PANELS SHALL EXTEND FROM SILL / SOLE PLATE TO FLOOR / ROOF DIAPHRAGM SHEATHING.
7. PROVIDE A MINIMUM OF TWO ANCHOR BOLTS PER SHEAR WALL PANEL.
8. TOE NAILING IS NOT ALLOWED FOR SHEAR TRANSFER NAILING OF SHEAR WALLS.
9. SHEATHING SHALL BE STRUCT. I PLYWOOD OR O.S.B.
10. ALL POSTS TO BE 4 x 4, U.O.N.

Shearwall Sheathing Schedule (5)
N.T.S.

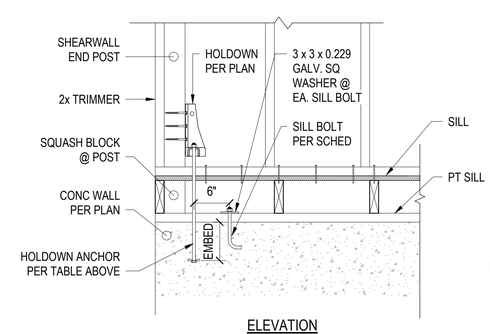

ELEVATION

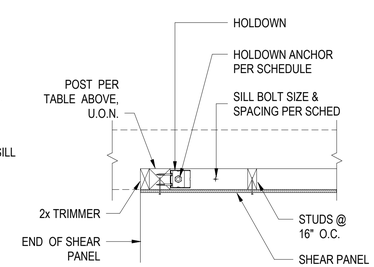

PLAN

HOLDOWN INTO CONCRETE - RAISED FLOOR

Holdown Schedule and Details - Foundation (2)
N.T.S.

ALL IDEAS, DESIGNS AND ARRANGEMENTS INDICATED ON THESE DRAWINGS ARE THE PROPERTY OF TKJ STRUCTURAL ENGINEERING, INC., AND ARE INTENDED TO BE USED IN CONNECTION WITH THIS SPECIFIC PROJECT ONLY, AND SHALL NOT BE USED FOR ANY OTHER PURPOSE WHATSOEVER WITHOUT THE WRITTEN CONSENT OF THE ENGINEER.

TRAVOIS
ARCHITECTURE, PC

Coyote Valley Homes I, LIHTC

Redwood Valley, California

ENGINEER

TKJ STRUCTURAL ENGINEERING
9820 Willow Creek Rd., Ste. 455
San Diego, California 92131
858.649.1700 | www.tkjse.com

STAMP

REGISTERED PROFESSIONAL ENGINEER
TIMOTHY K. JACKES
S 4845
EXP. 6-30-19
STRUCTURAL
STATE OF CALIFORNIA

REVISIONS	DATE
40% CDs	07/28/17
Progress Set	09/01/17
75% CDs	09/26/17
100% CDs	10/27/17

S502

Typical Shearwall Details

17065

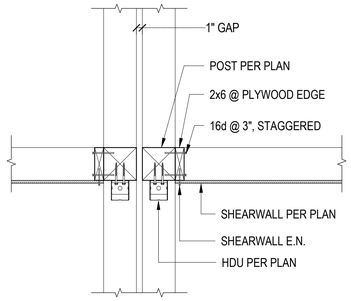

End Of Shearwall - Plan 10
N.T.S.

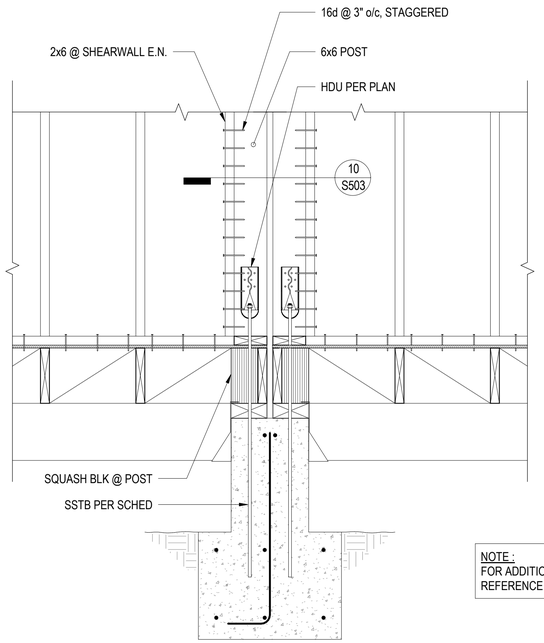

NOTE :
FOR ADDITIONAL INFO,
REFERENCE DETAIL 6 / S503

Holdown to Stemwall 7
N.T.S.

NOTE:
FOR ITEMS NOT NOTED,
SEE 15 / S500

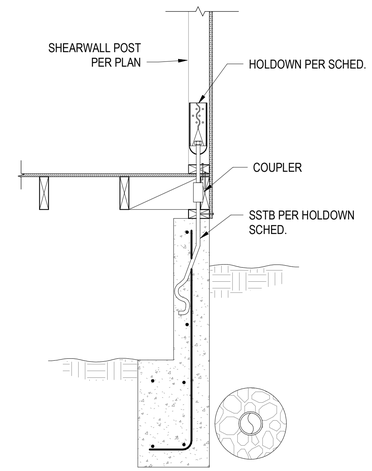

Footing @ Holdown 5
N.T.S.

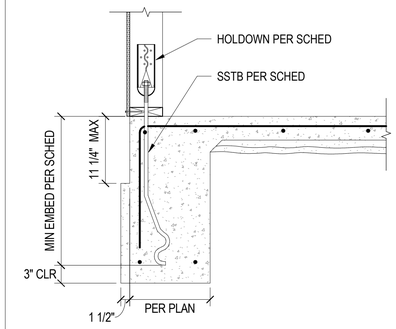

SSTB Footing 1
N.T.S.

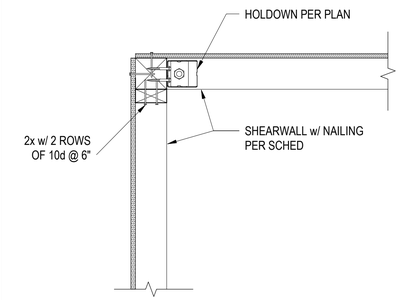

Shared Holdown 2
N.T.S.

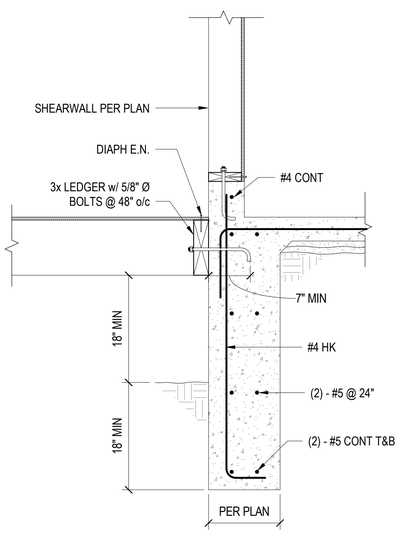

Raised Floor to Slab-on-grade 9
N.T.S.

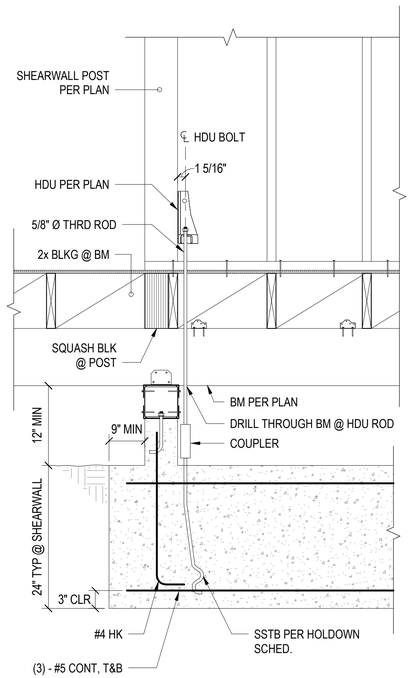

Holdown @ Interior Footing - Raised Floor 8
N.T.S.

NOTE :
FOR ADDITIONAL INFO,
REFERENCE DETAIL 15 / S500

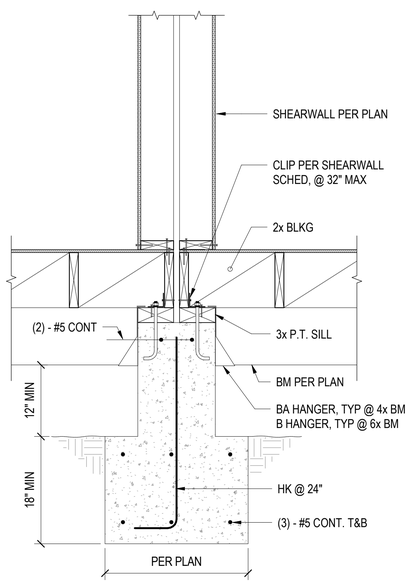

Partywall @ Raised Floor Foundation 6
N.T.S.

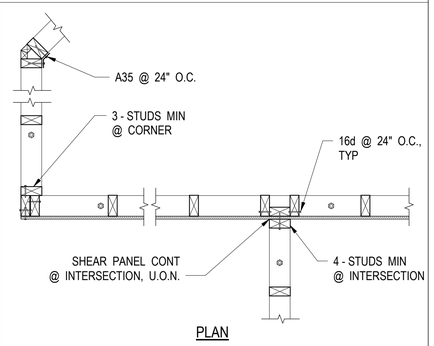

Typical Shearwall Intersections 3
N.T.S.

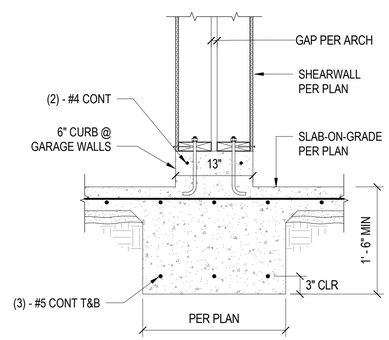

Partywall @ SOG Foundation 4
N.T.S.

TRAVOIS
ARCHITECTURE, PC

Coyote Valley Homes I, LIHTC

Redwood Valley, California

ENGINEER

STRUCTURAL ENGINEERING
9820 Willow Creek Rd., Ste. 455
San Diego, California 92131
858.649.1700 | www.tkjse.com

STAMP

REGISTERED PROFESSIONAL ENGINEER
TIMOTHY A. JACKISS
S 4845
EXP. 6-30-19
STRUCTURAL
STATE OF CALIFORNIA

REVISIONS	DATE
40% CDs	07/28/17
Progress Set	09/01/17
75% CDs	09/26/17
100% CDs	10/27/17

S503

Shearwall and Foundation Details

17065

ALL IDEAS, DESIGNS AND ARRANGEMENTS INDICATED ON THESE DRAWINGS ARE THE PROPERTY OF TKJ STRUCTURAL ENGINEERING, INC., AND ARE INTENDED TO BE USED IN CONNECTION WITH THIS SPECIFIC PROJECT ONLY, AND SHALL NOT BE USED FOR ANY OTHER PURPOSE WHATSOEVER WITHOUT THE WRITTEN CONSENT OF THE ENGINEER.

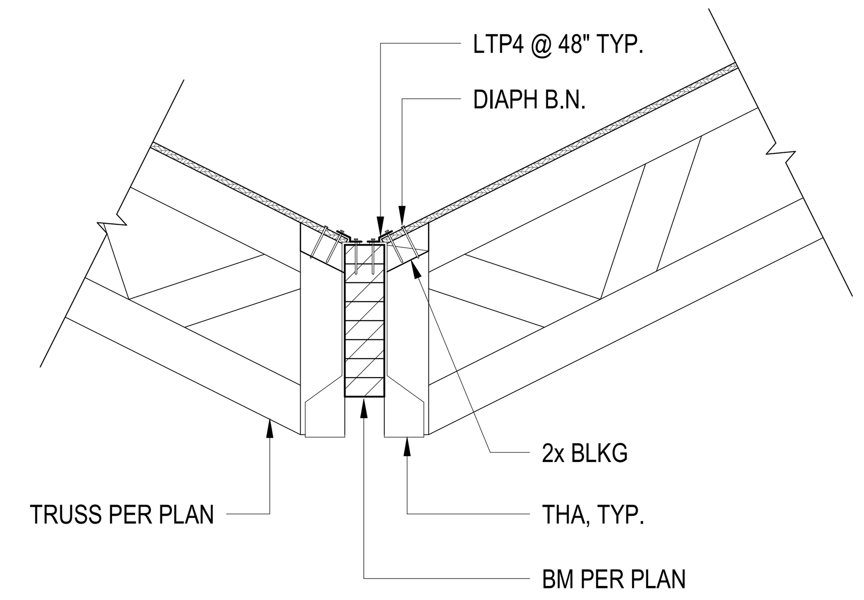

Roof Truss To Valley BM 6
N.T.S.

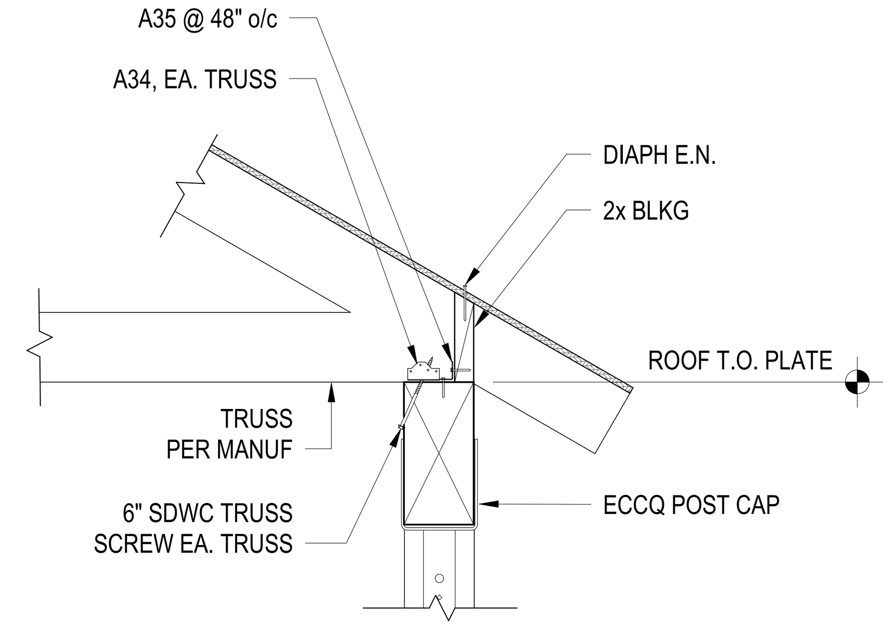

Truss to Beam 4
N.T.S.

TRUSS LOADING NOTES:

1. TYPICAL SUPERIMPOSED LOADS ARE AS FOLLOWS:

DL (TOP CHORD)	=	15 psf
DL (BOTTOM CHORD, TYP)	=	6 psf
DL (STUCCO WALL)	=	15 psf
LLr	=	20 psf
W+ (DOWNWARD)	=	16 psf MIN
W- (UPWARD)	=	25 psf MIN.

2. SEISMIC AND WIND ANALYSES OF STRUCTURE SHALL BE PERFORMED. THE STRUCTURE SHALL BE ANALYZED, USING RATIONAL METHODS MEETING THE PROVISIONS ASCE 7-10.

3. SEISMIC AND WIND DESIGN CRITERIA SHALL BE THOSE GIVEN IN BASIS OF DESIGN SECTION ON SHEET S0.0 OF THESE DOCUMENTS.

4. LOADS GIVEN ARE UNFACTORED, ALL APPROPRIATE LOAD FACTORS SHALL BE USED IN DESIGN AND ANALYSIS OF TRUSSES.

5. WEB MEMBER LOCATIONS AND ORIENTATIONS SHOWN IN DETAILS ARE FOR SYMBOLIC REPRESENTATION ONLY. ACTUAL LOCATIONS, ORIENTATIONS, AND LAYOUT SHALL BE BY THE TRUSS MANUFACTURER.

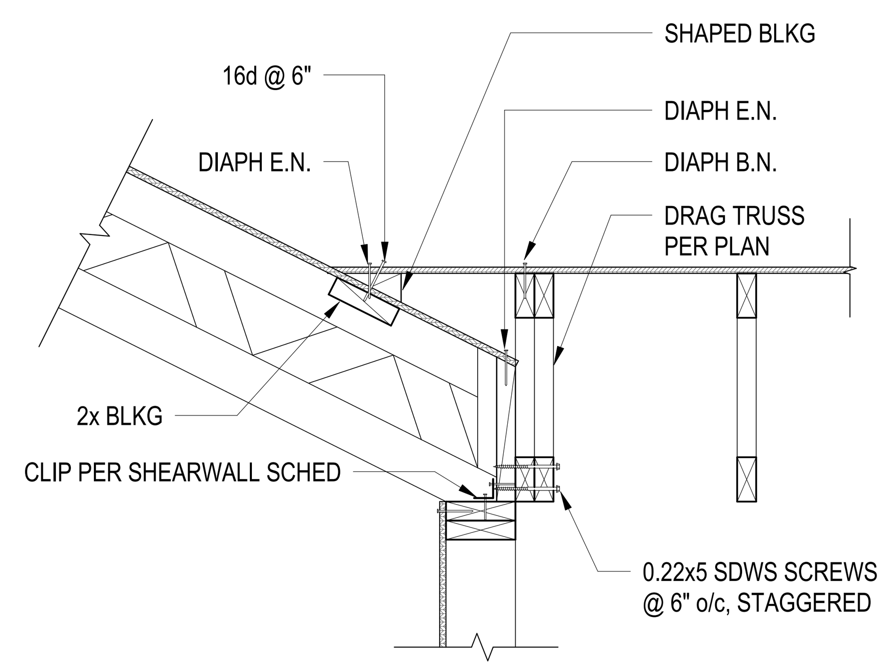

Truss Transition @ Shearwall 7
N.T.S.

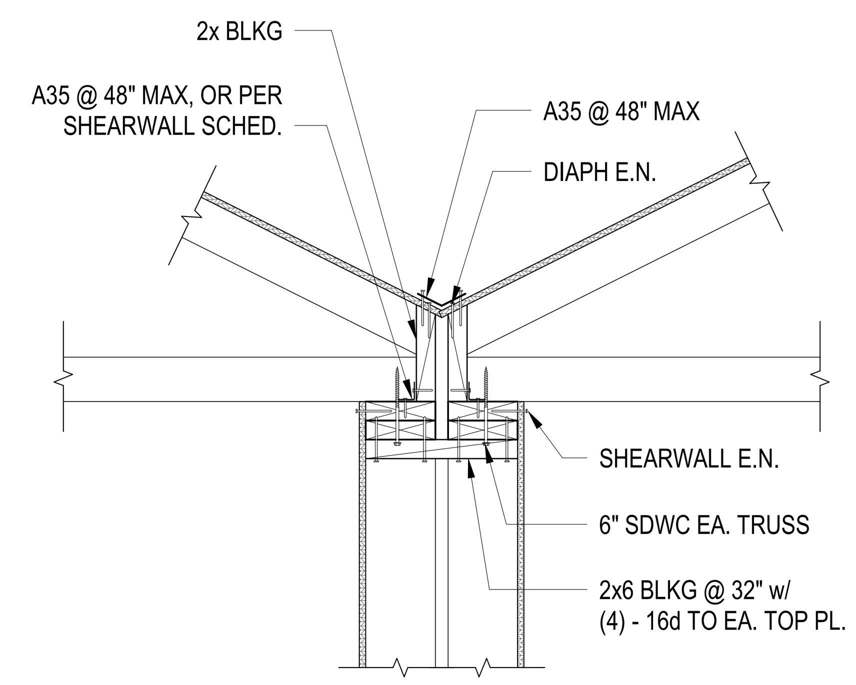

Roof Truss To Party Wall 5
N.T.S.

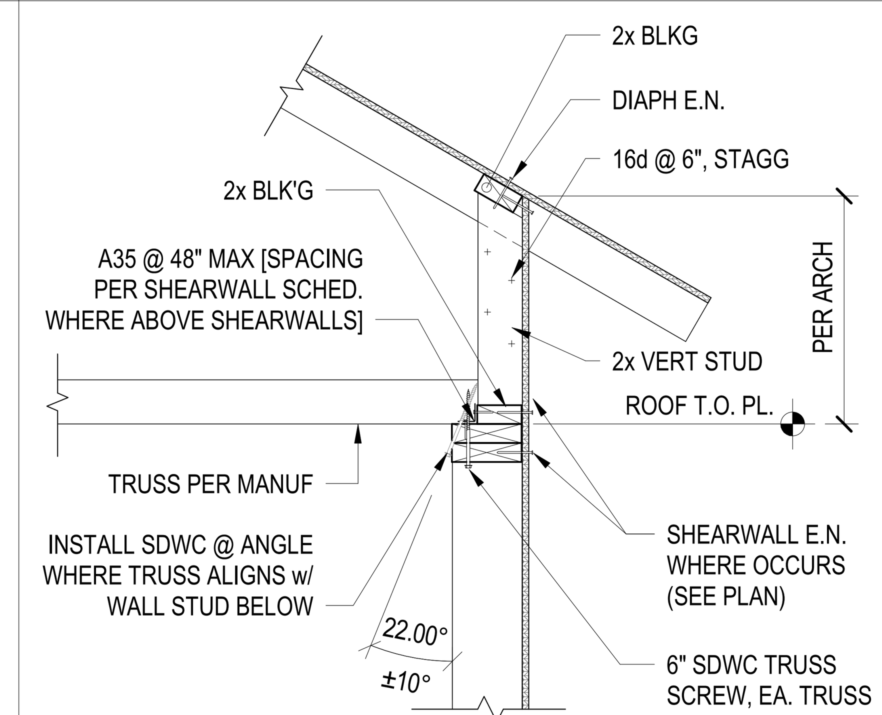

Truss To Bearing Wall 2
N.T.S.

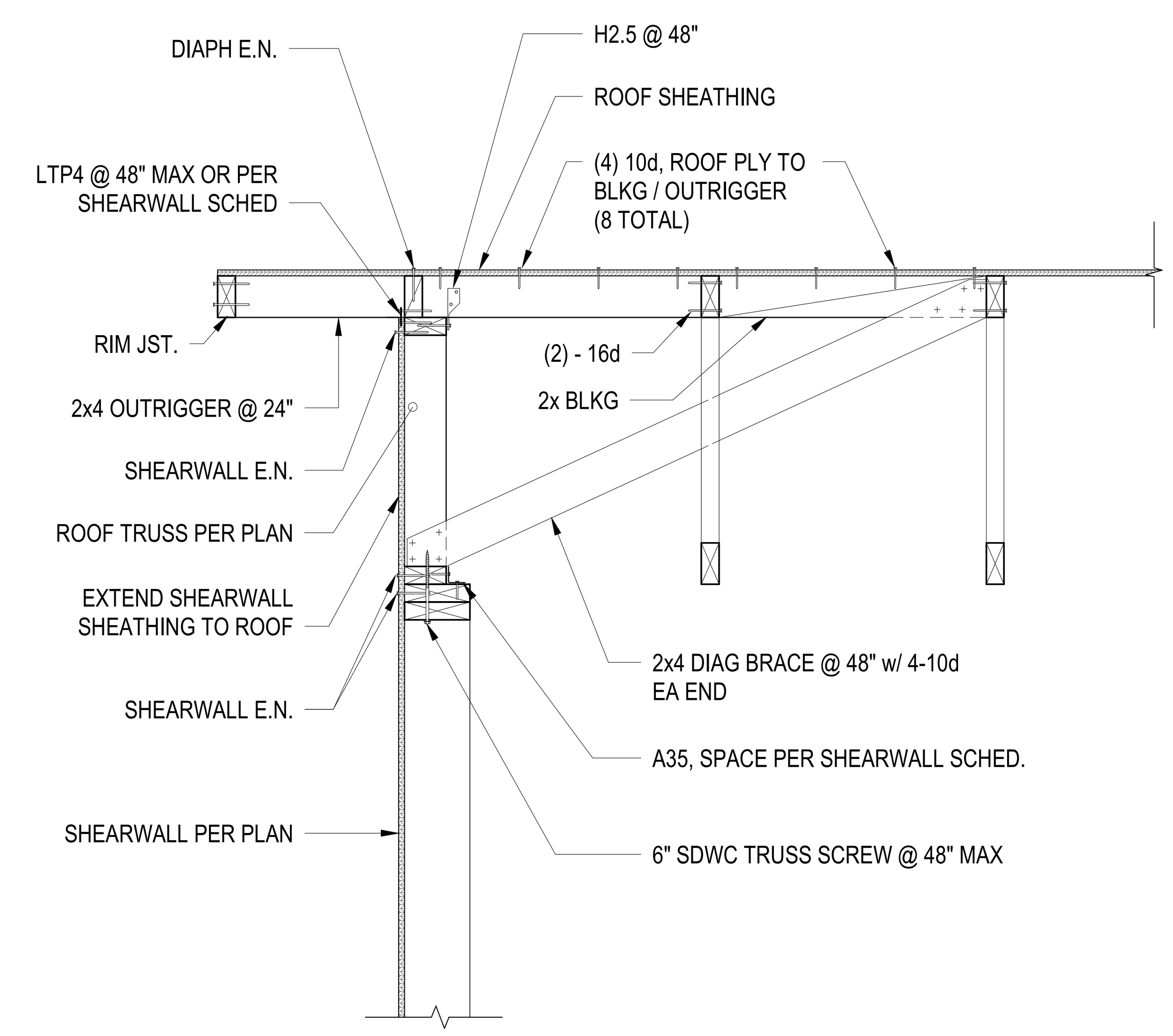

Gable Truss to Wall 3
N.T.S.

TRAVOIS
ARCHITECTURE, PC

Coyote Valley Homes I, LIHTC

Redwood Valley, California

ENGINEER

TKJ STRUCTURAL ENGINEERING
9820 Willow Creek Rd., Ste. 455
San Diego, California 92131
858.649.1700 | www.tkjse.com

STAMP

REVISIONS	DATE
40% CDs	07/28/17
Progress Set	09/01/17
75% CDs	09/26/17
100% CDs	10/27/17

S504

Truss Details

17065

ALL IDEAS, DESIGNS AND ARRANGEMENTS INDICATED ON THESE DRAWINGS ARE THE PROPERTY OF TKJ STRUCTURAL ENGINEERING, INC., AND ARE INTENDED TO BE USED IN CONNECTION WITH THIS SPECIFIC PROJECT ONLY, AND SHALL NOT BE USED FOR ANY OTHER PURPOSE WHATSOEVER WITHOUT THE WRITTEN CONSENT OF THE ENGINEER

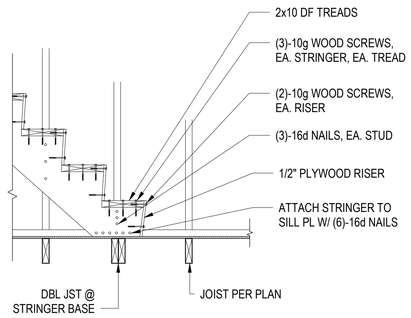

Stair Detail 12
3/4" = 1'-0"

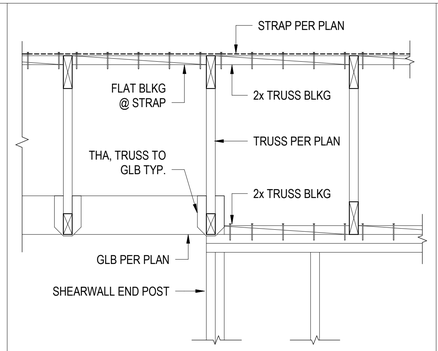

Roof Strap @ Shearwall 8
1" = 1'-0"

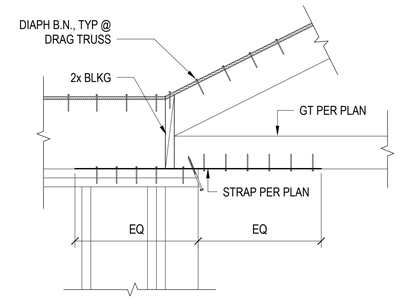

Drag Truss To Wall 5
1" = 1'-0"

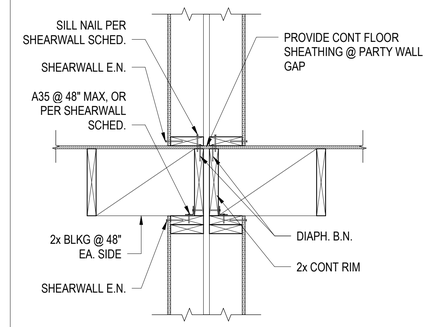

Floor Framing Parallel to Party Wall 1
1" = 1'-0"

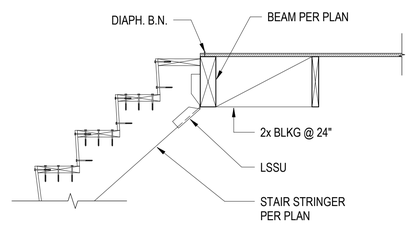

Stair Stringer To Wall 13
3/4" = 1'-0"

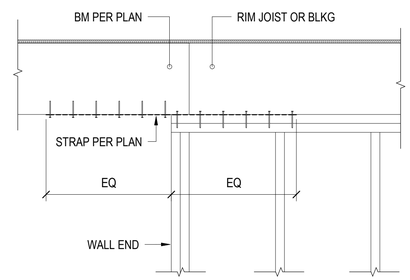

BM To Wall Strap 9
1" = 1'-0"

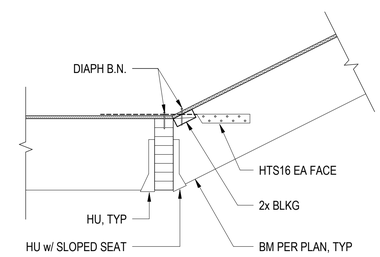

BM Strap 6
1" = 1'-0"

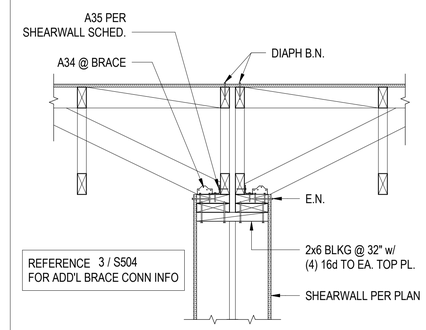

Roof Truss @ Top of Shear Wall 2
1" = 1'-0"

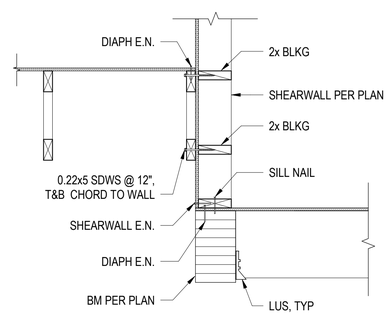

Shearwall To Beam 10
N.T.S.

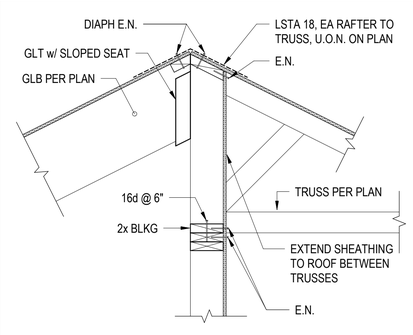

Truss Perpendicular To Shearwall 7
N.T.S.

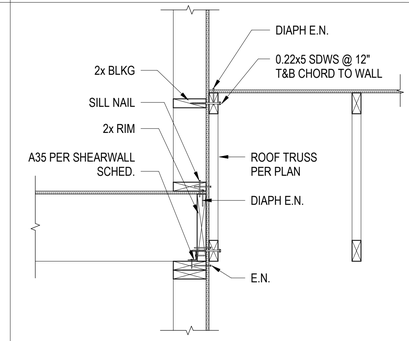

Roof Framing to Wall 3
1" = 1'-0"

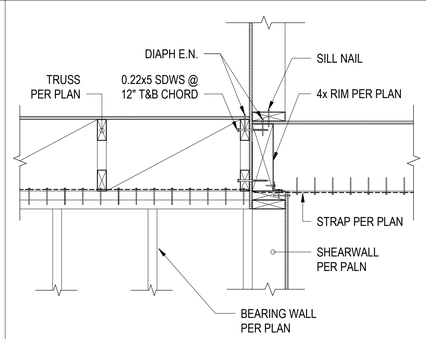

Strap @ Roof To Floor Transition 11
N.T.S.

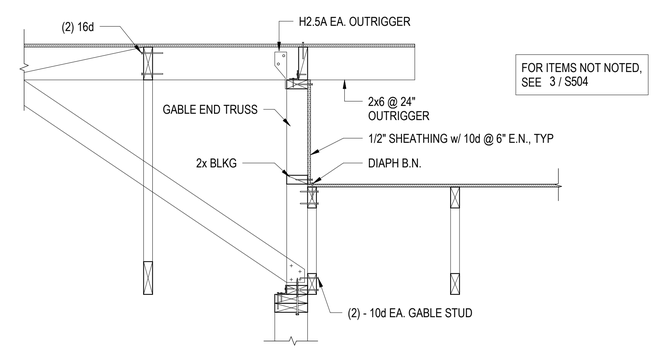

Low Roof to High Roof 4
N.T.S.

TRAVOIS
ARCHITECTURE, PC

Coyote Valley Homes I, LIHTC

Redwood Valley, California

ENGINEER

TKJ STRUCTURAL ENGINEERING
9820 Willow Creek Rd., Ste. 455
San Diego, California 92131
858.649.1700 | www.tkjse.com

STAMP

REGISTERED PROFESSIONAL ENGINEER
TIMOTHY A. JACKISS
S 4845
EXP. 6-30-19
STRUCTURAL
STATE OF CALIFORNIA

REVISIONS	DATE
40% CDs	07/28/17
Progress Set	09/01/17
75% CDs	09/26/17
100% CDs	10/27/17

S505

Wood Details

17065

ALL IDEAS, DESIGNS AND ARRANGEMENTS INDICATED ON THESE DRAWINGS ARE THE PROPERTY OF TKJ STRUCTURAL ENGINEERING, INC., AND ARE INTENDED TO BE USED IN CONNECTION WITH THIS SPECIFIC PROJECT ONLY, AND SHALL NOT BE USED FOR ANY OTHER PURPOSE WHATSOEVER WITHOUT THE WRITTEN CONSENT OF THE ENGINEER.

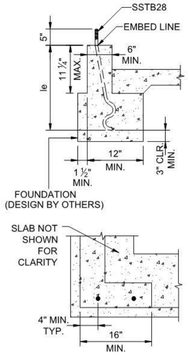

MINIMUM SSTB ANCHOR REQUIREMENTS [1,3,4]	
WOOD STRONG-WALL MODEL	SLAB ON GRADE - GARAGE CURB (CORNER AND STEP - DOWN END)
SW16	SSTB28
SW22	
SW18	SSTB28 [2]
SW24	
SW32	
SW48	

NOTES:
1. ADDITIONAL APPLICATIONS MAY USE THE SSTB WHERE THE DEMAND UPLIFT FORCE IS LESS THAN THE ALLOWABLE SSTB LOAD SHOWN IN ICC-ES ESR-2611.
2. SW18X8, SW24X8, SW32X9, SW48X8/9/10 UNDER SEISMIC LOADING MAY USE SSTB28 WITH NO LOAD REDUCTIONS. MAXIMUM UPLIFT FOR ALL OTHER MODELS SHALL BE LIMITED TO 10,085 LBS. (WIND AND SDC A&B), AND 8,475 LBS. (SDC C-F).
3. FOUNDATION DIMENSIONS ARE FOR ANCHORAGE ONLY. FOUNDATION DESIGN (SIZE AND REINFORCEMENT) BY OTHERS. THE REGISTERED DESIGN PROFESSIONAL MAY SPECIFY ALTERNATE EMBEDMENT, FOOTING SIZE OR ANCHOR BOLT.
4. SEE ICC-ES ESR-2611 FOR ADDITIONAL SSTB INFORMATION.

SSTB ANCHORAGE 1

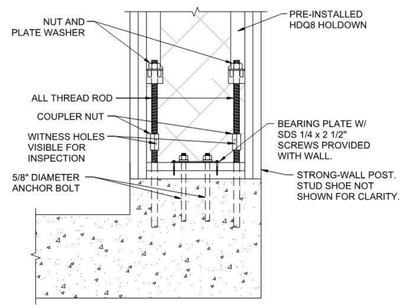

PORTAL WALL SILL 2

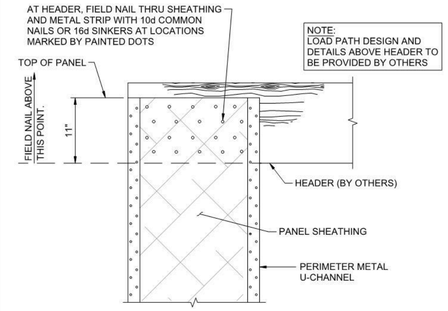

TOP OF WALL CONNECTION 3

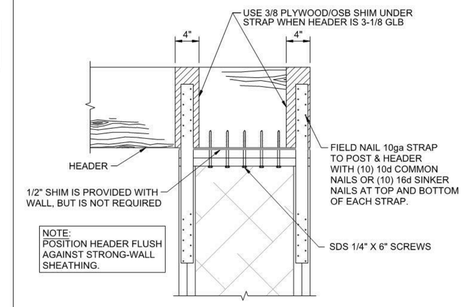

TOP OF WALL CONNECTION 4

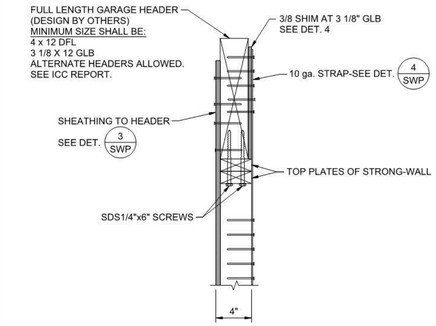

4" PORTAL WALL SECTION 5

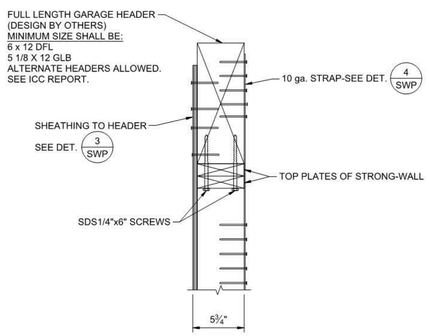

5.75" PORTAL WALL SECTION 6

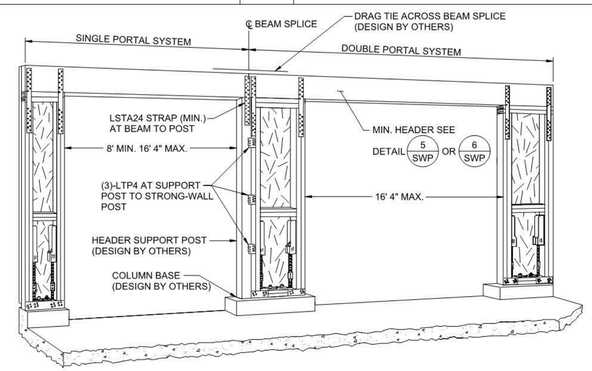

SINGLE & DOUBLE PORTAL ASSEMBLY 7

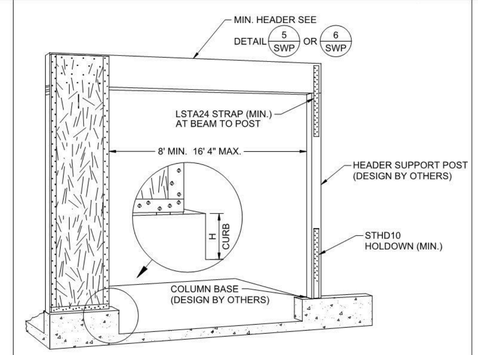

SINGLE PORTAL ASSEMBLY 8

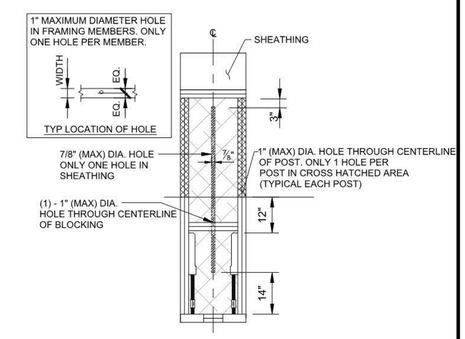

16" & 22" PORTAL WALL OPENINGS 9

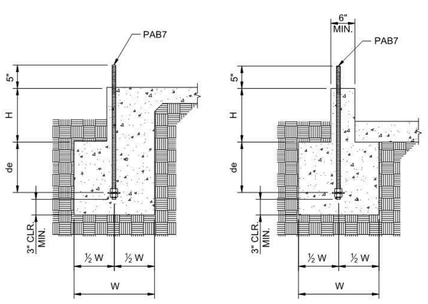

H = 13 ½" MAXIMUM WITH PAB7-30 ANCHOR BOLT WHEN de = 10"
H = 19 ½" MAXIMUM WITH PAB7-36 ANCHOR BOLT WHEN de = 10"

SLAB ON GRADE FOUNDATION CURB OR STEMWALL FOUNDATION

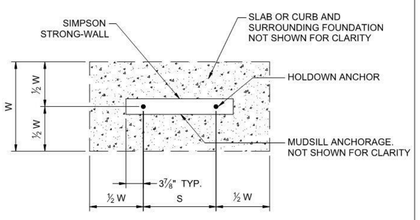

S = WALL LENGTH MINUS 7 ¾"
SEE TABLE BELOW FOR DIMENSIONS

FOUNDATION PLAN VIEW

FOUNDATION DIMENSIONS FOR STRONG-WALL ANCHORAGE				
	CONDITION	ASD ALLOWABLE UPLIFT (lbs)	W (in)	de (in)
SEISMIC	CRACKED	11,900	27	9
		13,100	29	10
	UNCRACKED	12,500	24	8
		13,100	25	9
WIND	CRACKED	6,200	16	6
		10,000	22	8
		12,900	26	9
		13,100	27	9
	UNCRACKED	6,400	14	6
		9,300	18	6
		12,500	22	8
		13,100	23	8

NOTES:
1. ANCHORAGE DESIGNS CONFORM TO ACI 318-14 AND ACI 318-11 APPENDIX D AND ASSUME MINIMUM f'c=2,500 PSI CONCRETE, ASTM A307 OR ASTM F1554, GRADE 36 ANCHOR RODS AND NO SUPPLEMENTARY REINFORCEMENT. HIGH STRENGTH ANCHORAGE DESIGN BY OTHERS WHEN REQUIRED.
2. SEISMIC INDICATES SEISMIC DESIGN CATEGORY C THROUGH F. DETACHED 1 AND 2 FAMILY DWELLINGS IN SDC C MAY USE WIND ANCHORAGE SOLUTIONS. SEISMIC ANCHORAGE DESIGNS CONFORM TO ACI 318-14 SECTION 17.2.3.4.3 AND ACI 318-11 SECTION D.3.3.4.
3. WIND INCLUDES SEISMIC DESIGN CATEGORY A AND B.
4. FOUNDATION DIMENSIONS ARE FOR ANCHORAGE ONLY. FOUNDATION DESIGN (SIZE AND REINFORCEMENT) BY OTHERS. THE REGISTERED DESIGN PROFESSIONAL MAY SPECIFY ALTERNATE EMBEDMENT, FOOTING SIZE OR ANCHOR BOLT.
5. FOR ANCHORAGE SOLUTIONS USING SSTB, SEE ICC-ES ESR-2611.

ANCHORAGE SCHEDULE 11

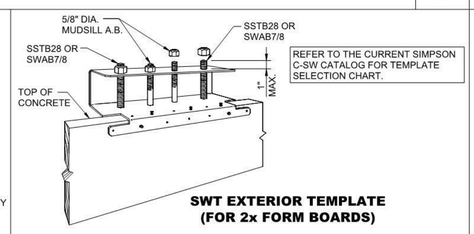

REFER TO THE CURRENT SIMPSON C-SW CATALOG FOR TEMPLATE SELECTION CHART.

SWT EXTERIOR TEMPLATE (FOR 2x FORM BOARDS)

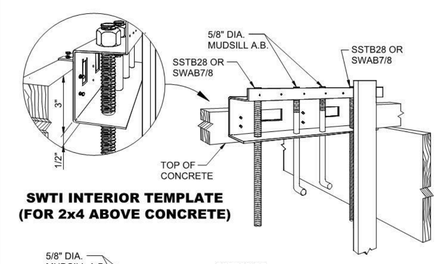

SWTI INTERIOR TEMPLATE (FOR 2x4 ABOVE CONCRETE)

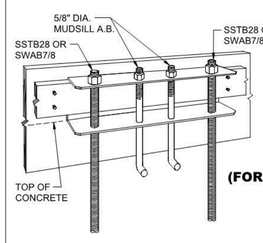

SWTPF TEMPLATE (FOR PLYWOOD PANEL FORMS)

SEE SHEET SW2 FOR STACKED STRONG-WALL ANCHOR BOLT REQUIREMENTS.

STRONG-WALL® TEMPLATES 12

NOTE:
ALL NECESSARY HARDWARE, FOR PANEL INSTALLATION, IS PRE-ATTACHED OR PROVIDED, EXCEPT FOR TEMPLATE AND ANCHOR BOLTS.

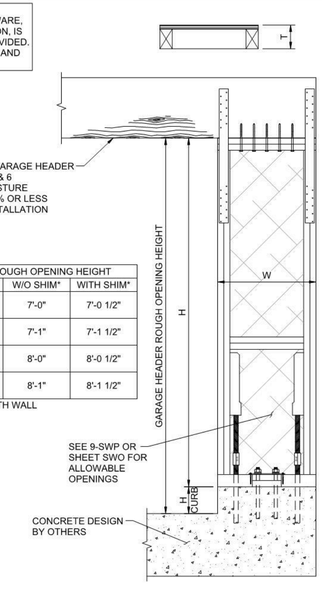

GARAGE HEADER ROUGH OPENING HEIGHT			
MODEL	H CURB	W/O SHIM*	WITH SHIM*
SW16x7x4 SW16x7x6	6"	7'-0"	7'-0 1/2"
SW22x7x4 SW22x7x6	7"	7'-1"	7'-1 1/2"
SW16x8x4 SW16x8x6	6"	8'-0"	8'-0 1/2"
SW22x8x4 SW22x8x6	7"	8'-1"	8'-1 1/2"

* 1/2" SHIM PROVIDED WITH WALL

GARAGE PORTAL WALL TABLE							
MODEL SET UP	W (IN)	H (IN)	T (IN)	NUMBER OF FASTENERS IN BOTTOM OF WALL	NUMBER OF MUDSILL ANCHORS	HOLDOWN ANCHOR BOLTS	ASSEMBLED WALL WEIGHT (lbs)
SW16x7x4	16	78	4	8-SDS 1/4x6	2-5/8"Ø	2-7/8"Ø	90
SW16x7x6	16	78	5 3/4	8-SDS 1/4x6	2-5/8"Ø	2-7/8"Ø	112
SW16x8x4	16	90	4	8-SDS 1/4x6	2-5/8"Ø	2-7/8"Ø	95
SW16x8x6	16	90	5 3/4	8-SDS 1/4x6	3-5/8"Ø	2-7/8"Ø	120
SW22x7x4	22	78	4	10-SDS 1/4x6	2-5/8"Ø	2-7/8"Ø	95
SW22x7x6	22	78	5 3/4	10-SDS 1/4x6	2-5/8"Ø	2-7/8"Ø	117
SW22x8x4	22	90	4	10-SDS 1/4x6	2-5/8"Ø	2-7/8"Ø	105
SW22x8x6	22	90	5 3/4	10-SDS 1/4x6	2-5/8"Ø	2-7/8"Ø	130

PORTAL WALL SPECIFICATIONS 13

1. STRONG-WALL® SHEARWALL IS MANUFACTURED AND TRADEMARKED BY "SIMPSON STRONG-TIE COMPANY INC.". HOME OFFICE: 5956 W. LAS POSITAS BOULEVARD, PLEASANTON, CA. 94588 TEL: (800) 999-5099, FAX: (925) 875-0826 "SIMPSON STRONG-TIE COMPANY INC." IS AN ISO 9001 REGISTERED COMPANY.
2. INSTALLATION OF PRODUCT SHALL BE DONE IN STRICT CONFORMANCE TO THESE DRAWINGS AND THE STRONG-WALL® INSTALLATION GUIDE. MODIFICATIONS TO THIS PRODUCT AND ASSOCIATED SYSTEMS OR CHANGES IN THE INSTALLATION METHODS SHOWN ON THESE DRAWINGS AND THE INSTALLATION GUIDE SHOULD ONLY BE MADE BY A QUALIFIED ARCHITECT, CIVIL, OR STRUCTURAL ENGINEER. THE PERFORMANCE OF SUCH MODIFIED PRODUCTS OR ALTERED INSTALLATION PROCEDURES IS THE SOLE RESPONSIBILITY OF THE DESIGNER. REFER TO ICC-ES ESR-1267 FOR FURTHER INFORMATION.
3. THE CONTRACTOR SHALL VERIFY ALL DIMENSIONS, CONDITIONS, ELEVATIONS, ETC. PRIOR TO INSTALLATION OF ANY COMPONENTS FOR THE STRONG-WALL® SYSTEM. IF ANY DISCREPANCIES ARE FOUND, THEY SHALL BE BROUGHT TO THE ATTENTION OF THE PROJECT ARCHITECT, PROJECT ENGINEER OR BUILDING DESIGNER FOR CLARIFICATION PRIOR TO CONSTRUCTION.
4. THE CONTRACTOR SHALL VERIFY THE POSITION OF THE STRONG-WALL IN RELATION TO THE REST OF THE BUILDING SYSTEM AS SHOWN ON THE PROJECT DRAWINGS.
5. USE OF THIS PRODUCT IS SUBJECT TO THE APPROVAL OF THE LOCAL BUILDING OFFICIAL.
6. THE BUILDING STRUCTURE SHALL BE DESIGNED IN ACCORDANCE WITH THE LATEST ADOPTED VERSION OF THE BUILDING CODE AND ANY OTHER LOCAL, STATE OR FEDERAL REQUIREMENTS THAT MAY APPLY. VERIFY DESIGN REQUIREMENTS WITH THE LOCAL BUILDING DEPARTMENT.
7. THIS PRODUCT IS PART OF THE OVERALL LATERAL FORCE RESISTING SYSTEM OF THE STRUCTURE. DESIGN OF THE BUILDING'S LATERAL FORCE RESISTING SYSTEM, INCLUDING A COMPLETE LOAD PATH NECESSARY TO TRANSFER LATERAL FORCES FROM THE STRUCTURE TO THE GROUND, IS THE RESPONSIBILITY OF THE DESIGNER.
8. SIMPSON STRONG-TIE COMPANY INC. RESERVES THE RIGHT TO CHANGE SPECIFICATIONS, DESIGNS AND MODELS WITHOUT NOTICE OR LIABILITY FOR SUCH CHANGES.
9. ALL HARDWARE CALLED OUT IS SIMPSON STRONG-TIE®

NOTES 14

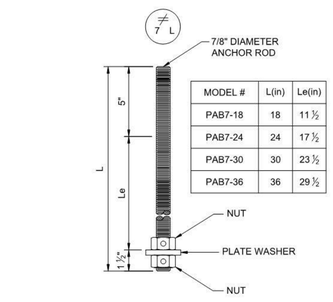

MODEL #	L(in)	Le(in)
PAB7-18	18	11 ½
PAB7-24	24	17 ½
PAB7-30	30	23 ½
PAB7-36	36	29 ½

PAB7 ANCHOR BOLT

NOTES:
1. SEE 11-SWP FOR DIMENSIONS AND ADDITIONAL NOTES.

ANCHORAGE - TYPICAL SECTIONS 10

NO.	DATE	REVISIONS
3	09/23/07	GENERAL REVISIONS
4	08/29/08	ESR-1267 REVISIONS
5	02/22/11	ESR-2611 REVISIONS
6	07/11/13	2012 IBC REVISIONS
7	08/08/16	2015 IBC REVISIONS

SIMPSON STRONG-TIE COMPANY INC.
HOME OFFICE: 5956 W. LAS POSITAS BLVD., PLEASANTON, CA 94588
Tel: (800) 999-5099 Fax: (925) 875-0826

SIMPSON Strong-Tie® THERE IS NO EQUAL

STRONG-WALL® PORTAL WALLS

SIMPSON Strong-Tie® THERE IS NO EQUAL

NAME
DATE 8-8-2016
SCALE N.T.S.
CHECKED
SHEET **SWP**
OF SHEETS
JOB NO.